TekDoc

USER MANUAL

2027

RX TEAM

BH

CONTENTS

01 INTRODUCTION 3
- SYMBOLS 3

02 BH WARRANTY 4
- LIFETIME FRAME WARRANTY 4
- REGISTERING THE LIFETIME FRAME WARRANTY 5
- SUBMITTING A WARRANTY CLAIM 5

03 MAINTENANCE 5
- INSPECT THE BICYCLE BEFORE USE 5
- KEEP THE BICYCLE CLEAN 6
- KEEP THE TRANSMISSION LUBRICATED AT ALL TIMES 6
- PART MAINTENANCE 6
- SPARE PARTS 7
- AFTER A FALL, BLOW OR IMPACT 7

04 WARNINGS ON USE 8
- MAXIMUM TYRE SIZE 8
- MINIMUM AND MAXIMUM INSERTION LENGTH OF THE SEAT POST 8
- MAXIMUM FORK LENGTH (AXLE-TO-CROWN) 8
- MAXIMUM NUMBER OF STEERING SPACERS 8
- POSITION OF THE SPINDLE INSIDE THE FORK TUBE 8
- INTENDED USE 8

05 SIZES AND DIMENSIONS 8

06 TECHNICAL SPECIFICATIONS 9

07 ASSEMBLY AND SPARE PARTS 10
- DIMENSIONS OF THE STEERING TUBE 10
- HEADSET ASSEMBLY 10
- EVO SL MONOCOQUE 11
- CABLING OF THE ELEMENTS OF THE MONOCOQUE 11
- SMR STEM 12
- FRONT AXLE MOUNTING 12
- HANGER 12
- MOUNTING THE BUILT-IN LOCK ON THE SADDLE'S SEAT POST 13
- DERAILLEUR BRACKET 13
- TOOLBOX 14
- BOTTLE HOLDER 14
- MOUNTING THE SHIMANO DI2 IN BOTTOM BRACKET SHELL 15
- MOUNTING OF THE SHIMANO DI2 ON THE SEAT POST 16
- REAR LIGHT 16
- CABLING OF THE MECHANICAL PARTS 17

08 DECLARATION OF CONFORMITY 18

09 HELP AND ADDITIONAL RESOURCES 18

01 INTRODUCTION

This user manual contains important information for proper use and maintenance of the bicycle. In particular, this document contains specific information about the RX TEAM (LC507 / LC407 / LC307). Please read the entire manual carefully. The user manuals of all BH models can be consulted on the website at the following address:

https://www.bhbikes.com/manuals

Keep in mind that the manuals on the BH BIKES website are updated on a regular basis. Make sure you have downloaded the latest version from the website. You can check the version on the front page.

This document contains additional information to the general user manual, available at:

https://www.bhbikes.com/es_INT/quienes-somos/manuales-descargas

You can check the characteristics, recommendations and warranties of third-party parts on their corresponding official websites.

SYMBOLS

This document contains different icons that refer to use, maintenance and assembly warnings. Carefully read the meaning of each one to prevent improper handling or hazardous situations that may result in serious personal injuries or fatal accidents.

SAFETY

DANGER: refers to a hazardous situation that, if not avoided, will lead to serious injuries or even a fatal accident.

WARNING: refers to a hazardous situation that, if not avoided, could lead to serious injuries or even a fatal accident.

ATTENTION: refers to a hazardous situation that, if not avoided, could cause minor or moderate injuries.

RISK OF ELECTRIC SHOCK: refers to a hazardous situation that, if not avoided, could cause serious injuries due to electric shock or even death.

RISK OF SHORT CIRCUIT: refers to a hazardous situation that, if not avoided, could cause short circuits in the electrical components. Short circuits may cause damage to the electrical components and fire.

TOOLS

FLAT WRENCH

ALLEN KEY

TORX KEY

PHILLIPS SCREWDRIVER

10Nm **TIGHTENING TORQUES:** on one side of each tool symbol, the tightening torque will be indicated in newton metre.

TYPE OF ASSEMBLY COMPOUND

OIL: light lubrication for elements such as chains and cables.

GREASE **GREASE:** assembly grease.

CARBON **CARBON PASTE:** assembly paste used to increase the friction of the carbon elements.

GLUE **ADHESIVE:** use medium strength thread lock.

Adhesive is used to fasten bolts and make sure that they do not come loose due to vibrations when using the bicycle. Add a drop of thread lock to the tip of the screw thread in all cases. Never apply more than one drop around the thread, since this will make it very hard to remove the bolt.

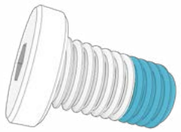

02 BH WARRANTY

BH BIKES undertakes to offer long-lasting bicycles, in compliance with the highest standards of quality. Therefore, in addition to the statutory warranty, BH BIKES offers an additional coverage and warranty. This section defines the different types of warranty and the process that must be followed to register for the additional "LifeTime Frame" warranty.

STATUTORY WARRANTY

The statutory warranty covers the original purchaser in the event of manufacturing defects and/or non-conformities. This warranty applies to frames and components manufactured by BH BIKES. The warranty period will be established according to the current laws of the country where the bicycle was purchased, and will start on the date of purchase. During this period, the holder of the warranty will be entitled to have all manufacturing defects repaired or replaced free of charge, including the reimbursement of transport expenses and any losses caused as a result of this. Different conditions must be met in order to be covered by the warranty:

- This warranty does not affect the consumer's applicable rights, according to the current laws in each country.
- Faulty bicycles or parts will be covered by warranty upon the decision of our Technical Service.
- The warranty does not include the replacement of parts prone to wear and arising from normal use of the bicycle.
- The warranty does not cover defects or broken parts due to improper use of the bicycle, use for competitions, mounting of non-original accessories or improper handling and incorrect maintenance work.
- The warranty does not apply if the inspection before delivery and the corresponding inspection intervals included in this document have not been carried out, observed, documented as required and stamped by an authorised BH dealer.
- Should the repair not be satisfactory and not ensure that the optimum conditions are met according to the intended use, the holder of the warranty will be entitled to request the replacement of the purchased item or faulty part with one of identical characteristics, or to receive a refund of the amount paid for the damaged item or part.
- The warranty period will be interrupted during the repairs or, in the event of replaced items or components, it will be renewed.
- Any claim against this warranty shall expire six months after the end of the warranty validity period.
- All warranty claims must be processed by an authorised dealer.
- Geographical scope: refer to the User Manual or www. BHbikes.com

Visit the following link to read the terms and conditions:

https://www.bhbikes.com/es_INT/registro-garantia-vida-bh/registra-tu-bici-garantia-de-por-vida

LIFETIME FRAME WARRANTY

Through its authorised stores, BH Bikes provides the original buyer with a commercial policy to cover any manufacturing defects in frames for a period beyond that specified in the product's statutory warranty, pursuant to the following clauses:

1. **The LIFETIME warranty solely applies to BH frames and bikes that are sold through stores that are authorised by BHBIKES EUROPE S.L.**
   - The buyer must register the LIFETIME warranty online, with the information duly completed, within 30 calendar days of the purchase date, as it appears on the invoice issued by the authorised store.
   - This warranty cannot be transferred to subsequent buyers and it is cancelled when the bicycle is sold to a third party. Original buyer means the individual who registers the warranty at the time of the purchase; the commercial warranty cannot be transferred to third parties who are not the original buyer.
   - It shall be compulsory to have the bicycle serviced in an establishment that is authorised by BHBIKES EUROPE and according to the instructions in the user manual.
2. **The LIFETIME warranty does not cover:**
   - The rear swingarms of the double suspension models, fork, kids' bikes, defects and/or fading of the original paint, or rust caused by natural deterioration.
   - Defects or breakages resulting from an accident or improper and/or negligent use of the bicycle.
   - When components or accessories that are not intended for or are not compatible with the use for which the bicycle was designed have been installed.
   - Defects resulting from improper handling.
   - Scratches, discolouration, or stains caused by the use of abrasive fluids, sharp items, clamps and/or prolonged exposure to sunlight or other weather conditions.
   - Defects caused by the bicycle's normal wear and tear, including those due to material fatigue. Fatigue damage is a sign that the frame has been damaged by normal use, so it is the user's responsibility to regularly inspect the bicycle.
   - Improper use and/or maintenance of the product (carefully read the recommendations for use and cleaning).
   - Frames that have been used in competitions, demos or as rentals.

Read the full terms and conditions at:

https://www.bhbikes.com/es_INT/registro-garantia-vida-bh/registra-tu-bici-garantia-de-por-vida

REGISTERING THE LIFETIME FRAME WARRANTY

You must register the bicycle within 30 days of purchase to enjoy the BH BIKES extended warranty. Follow the steps below to activate the LIFETIME FRAME extended warranty:

- LIFETIME FRAME WARRANTY

You must register the bicycle on the BH BIKES website to enjoy the LIFETIME FRAME extended warranty:

https://www.bhbikes.com/es_INT/registro-garantia-vida-bh/registra-tu-bici-garantia-de-por-vida

Watch this video to find out what you need to do:

https://youtu.be/47aLVgUI248

The serial number required to register the bicycle is located on the bottom of the bicycle, on the seat tube, above the bottom bracket:

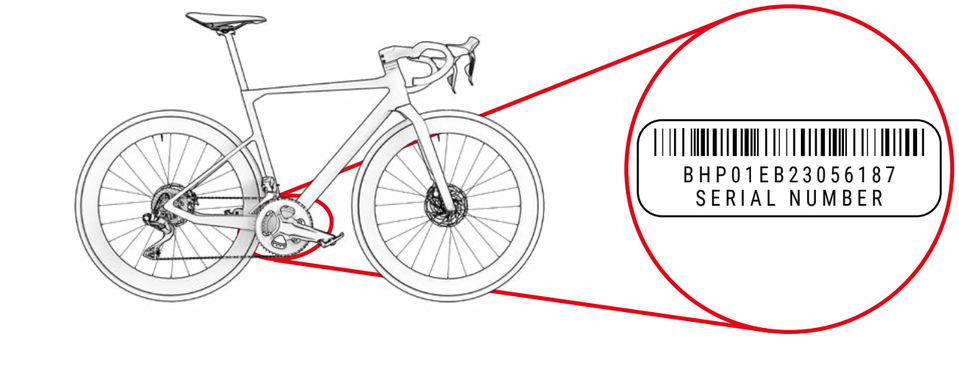

SUBMITTING A WARRANTY CLAIM

All warranty claims must be channelled through an official BH dealer. The dealer will analyse the claim to identify its scope and perform a preliminary assessment of the incident. The dealer will submit and process the claim directly with BH. Once BH has defined the corrective measures required, the dealer will send this information to the customer.

All claims must be processed by the official dealer from which you purchased your bicycle. If this is not possible, please contact us directly. We will help you find an authorised dealer near you:

https://www.bhbikes.com/es_INT/quienes-somos/contacto

03 MAINTENANCE

This user manual contains important information for RX TEAM (LC507 / LC407 / LC307). Please read the entire manual carefully. The user manuals of all BH models can be consulted on the website at the following address:

https://www.bhbikes.com/manuals

This document contains additional information to the general user manual, available at:

https://www.bhbikes.com/manuals

You can check the characteristics and recommendations of third-party parts on their corresponding official websites.

INSPECT THE BICYCLE BEFORE USE

Bicycles are inspected several times throughout the manufacturing process and then at the BH workshop during the final check. As the bicycle's operation may be affected during transport or third parties may have modified the bicycle before its sale, the following must be checked before each trip:

- FRAME: no cracks, damage or strange noises.
- CHAIN: it must be lubricated and the transmission system must not make any strange noises.
- BRAKES: the brakes must be working properly. When stopped, press the brake lever with enough strength and check that it does not touch the handlebars.
- TYRES: the pressure must be correct and there must be no cuts on the tread or on the sides. Also check that the wear level does not exceed the maximum recommended level.
- WHEELS: the wheels must rotate freely in order to check how they rotate. Also check the space between the brake lining and the rim, as well as the space between the frame and tyre.
- STEERING: the steering must turn smoothly and with no strange noises.
- SWINGARM ROTATION POINTS: when weight is exerted on the bicycle, the suspension must work as expected and with no strange noises. If it is not working properly or there is play between the moving parts, this might mean that the tightening torques are incorrect or that the bearings are worn.
- BEARINGS: the bearings must work properly and with no strange noises. The bearings are subject to wear and must be replaced to prevent damage to the components on which they are installed.
- ELECTRICAL SYSTEM: if the bicycle features an electrical system, check that it is functioning properly by ensuring that the electrical assistance mode is running and that all parts are functioning properly (motor, display, change of assistance mode and speed sensor). If there is no electrical assistance, check that all connections are correct and show no signs of damage.

Do not ride your bicycle if it does not meet any of these points! A faulty bicycle may cause serious accidents! If you are unsure or have any queries, please contact your nearest BH workshop!

Check the tightening torques to make sure that they are as described in the recommendations in the user manuals. Failure to observe these recommendations may result in accidents and even death.

The effect of the ground and the forces exerted on the wheel subject the bicycle to a lot of stress. The different parts will be subject to fatigue and wear because of these dynamic loads. Check the bicycle at regular intervals to look for signs of wear, scratches, bent parts, wear on the finish or the formation of cracks. Parts may fail suddenly after their service life has expired. Take your bicycle to an authorised BH workshop regularly to have these parts replaced if needed.

KEEP THE BICYCLE CLEAN

We recommend you follow these basic prevention measures to make sure that the bicycle is in perfect working order. Failure to observe these recommendations may lead to premature wear or even breakages in specific areas, such as gaskets or moving parts.

- Clean the dust and mud with a damp sponge and a gentle and neutral cleaning product.
- Plastic parts must only be washed with soapy water.
- Tyres can be washed with a sponge or brush and soapy water.
- After cleaning the bicycle, dry it by rubbing it firmly with a smooth cloth.
- After each cleaning, lubricate the transmission elements.

Dirt may cause damage that can result in accidents or even death.

Never use pressure washers or steam cleaners.

KEEP THE TRANSMISSION LUBRICATED AT ALL TIMES

After washing the bicycle, the chain transmission's lubrication may have also been washed off. Inspect and lubricate the chain's links, if needed. Excess lubrication may attract more dirt, causing premature wear and incorrect functioning of the system.

Never use pressure washers or steam cleaners.

PART MAINTENANCE

The bicycle requires regular maintenance and a minimum number of regular inspections. The frequency of the maintenance operations depends on the type of vehicle (leisure, road or mountain bike), as well as the frequency and conditions of use.

PART MAINTENANCE CALENDAR

Part	Action required	Before each outing	Monthly	Annually
Lighting	Functional check.			
Tyres	Pressure check.			
	Inspect the height of the profile and sides.			
Brakes (on the rim)	Check the lever travel, lining strength and rim position.			
	Brake test when stopped.			
	Clean the brake pads.			
Brake cables	Visual inspection.			
Brakes (disc brakes)	Change the brake fluid (DOT fluid).			
Suspension fork	Check the bolts and the corresponding tightening torque.			
	Change the oil and lubricate the elastomer.			
Saddle seat post with suspension	Maintenance.			
	Play check.			
Rims on rim brakes	Inspection and replacement, if needed, of the wall linings.	At the latest after the second part of the brake lining.		
Bottom bracket axle	Check the play.			
	Re-lubrication.			
Chain	Check and lubrication.			
	Check and replacement.	After 800 km.		
Chainsets	Check and tightening.			
Wheels / Spokes	Check wheel spin and spoke tension.			
Headset	Inspection of the headset.			
	Re-lubrication.			
Metal surfaces	Maintenance.	At least once every six months.		
Hubs	Bearing inspection.			
	Re-lubrication.			
Pedals	Bearing inspection.			
	Lubrication, cleaning the anchoring mechanism.			

Part	Action required	Before each outing	Monthly	Annually
Saddle seat post / Stem	Inspection of the fastening screws.			
Rear derailleur / Derailleur	Cleaning, lubrication.			
Quick-release mechanism / Thru-axle	Efficacy check.			
Nuts and bolts	Check and tightening.			
Spokes	Tension check.			
Stem / Saddle seat post	Removing and applying new assembly paste.			
Circuit / Brakes	Disassembly and greasing.			
Components of the electrical assistance system	Check the connections.			
	Check there is no dirt.			

You do not need to take the bicycle to an expert if you are skilled, experienced and have the appropriate tools. Immediately implement the corrective measures if you detect problems. If you are unsure or have queries, please contact BH.

The tasks described above must only be carried out by a trusted bike repair expert.

SPARE PARTS

Original parts must be used to ensure the optimum performance of your bicycle and the utmost safety. Failure to use original parts may cause damage that is not covered by the warranty.

The most common spare parts are parts prone to wear. The most common ones are tyres, inner tubes, brake pads, disc brakes and brake pads, as well as rims, when these are part of the brake unit, headlights, position lights, batteries and accumulators.

- **TYRES:** Replace them with an equivalent type of tyre. Check the marking on the outside of the tyre (ETRTO standard). Keep in mind that using a tyre with a larger outer diameter than the recommended one may cause the tip of the foot to touch the front wheel or rear wheel guard when the handlebars turn. The cyclist may lose control of the bicycle and suffer an accident with serious consequences. This can also occur when the pedal chainset is replaced with a longer one.
- **INNER TUBES:** Replace them with a suitable type of inner tube, according to the type of tyre. Refer to the information on the outside of the inner tube (ETRTO standard).
- **DISC BRAKES AND BRAKE PADS:** Follow the instructions supplied by the manufacturer.
- **HEADLIGHTS AND POSITION LIGHTS:** Replace the bulb with one of the same type. Check the indication on the metal area.
- **CHAIN, COG AND CHAIN RINGS:** Follow the instructions supplied by the manufacturer.
- **BATTERIES AND ACCUMULATORS:** Change for the same type. Check the indication on the outer area.

⚠ Remember that the failure to use original parts may cause damage that is not covered by the warranty.

AFTER A FALL, BLOW OR IMPACT

If you suffer a fall, blow or impact, first make sure that you are okay to continue cycling. Do not use the bike if you are injured and ask for medical assistance if needed.

If you are okay to continue cycling, check the bicycle to make sure that it is in perfect working order:

- Check that the wheels are firmly secured and that the rims are in the centre of the frame and fork. Turn the wheels. If they cannot be centred in situ because the gap is too small, separate the brakes from the rim so it can move freely.

⚠ In this case, keep in mind that the braking efficacy will be less.

- Check whether the handlebars or the front of the frame are twisted or broken. Check that the front is firmly seated on the fork, holding the front wheel firmly between your legs and trying to twist the handlebars with respect to the front wheel.
- Check that the chain is fitted correctly. If the bicycle fell onto the transmission side, check that it is working properly. Ask for help to place the bicycle on its saddle and change gears. When the chain fits on the largest cog, check the distance between the gear and the spokes. If the gear or bracket are bent, the first one may become stuck on the spokes - Danger of falling! The gear, rear wheel or frame may be damaged. Check the derailleur. If it has shifted, the chain may come off the gear. The bicycle's transmission will become less effective (also refer to the "Traction" section).
- Check the saddle, upper tube or the bottom bracket box to make sure that there are no defects.
- Lift the bicycle slightly and let it drop onto the ground. If there are any noises, inspect the bicycle for any loose bolts.
- Inspect the entire bicycle again to check for bent areas, worn finish or cracks.
- Ride again carefully if no problems have been detected during the inspection. Do not brake or accelerate suddenly or pedal when going uphill. If you are unsure, wait for a car to pick you up instead of risking an accident. Once home, you should inspect the bicycle carefully again. If you are still unsure or have any queries, please contact your nearest BH workshop!

⚠ Bent aluminium parts must not be straightened, i.e., they must not be repaired. Even afterwards, there is a high risk of breakage, especially in regards to the fork, handlebars, front part, chainsets and pedals. Replace them for greater safety.

04 WARNINGS ON USE

MAXIMUM TYRE SIZE

If you install a tyre of a different size on your bicycle, check and make sure that there are at least 6 mm between the tyre and other parts of the frame and fork.

MINIMUM AND MAXIMUM INSERTION LENGTH OF THE SEAT POST

Failure to observe the maximum and minimum seat post insertion dimensions indicated in this manual may cause a lever effect on the frame. The pressure exerted could damage the frame and cause serious accidents. The warranty does not cover the damage generated by failing to observe these indications.

MAXIMUM FORK LENGTH (AXLE-TO-CROWN)

Observe the maximum length between the fork axle and the lower part of the steering tube (axle-to-crown). If this maximum length is not observed, the frame could be damaged due to withstanding a greater load than that for which it was designed and may cause serious accidents.

MAXIMUM NUMBER OF STEERING SPACERS

This manual specifies the maximum number of steering spacers that can be fitted under the stem. If this maximum quantity is not observed, the materials could be damaged due to withstanding a greater load than that for which they were designed and may cause serious accidents.

POSITION OF THE SPINDLE INSIDE THE FORK TUBE

No steering spacers must be fitted above the stem. Otherwise, the materials could be damaged due to withstanding a greater load than that for which they were designed and may cause serious accidents.

INTENDED USE

Each bicycle has been designed to achieve a specific intended use. The models described in this manual have the following intended use:

This is a set of conditions for the operation of the bicycle that provides for its use on asphalt roads. In addition, the wheels must be kept in contact with the running surface at all times.

05 SIZES AND DIMENSIONS

ALL MODELS

RX TEAM

	H1	H2	H3	H4	H5	H6	H7	A1	A2	REACH	STACK
XS	478	100	389	503	584	426	1000	77	69.5	366	510
SM	500	120	390	527	591	426	1003	75	70	370	540
MD	520	140	390	548	602	426	1013	73	70.5	377	556
LA	540	160	390	567	614	426	1025	73	71	387	577
XL	560	180	390	587	626	426	1038	71	71	398	598

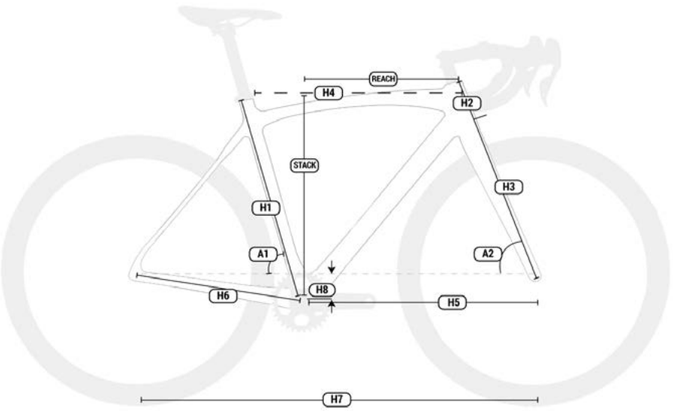

TECHNICAL SPECIFICATIONS

Characteristics	Models	Specification
Material		
Frame	All	Carbon
Fork	All	Carbon
Recommended use	All	Road, Racing Performance
Sizes	All	XS, SM, MD, LA, XL
Fork reach	All	45mm
Maximum steering spacer height	All	2x15 + 1x10mm (pre-cut as standard)
Fork steering tube	All	Full carbon 1.5", conical
Compatible wheel size	All	700C
Maximum tyre width	All	32 mm
Bottom bracket	All	BB386
Bottom bracket box width	All	86,5 mm
Inner diameter of the bottom bracket box	All	46 mm
Standard front dropouts	All	Thru-axle
Front axle dimensions	All	100mm
Front axle pitch thread	All	12 x 1.0
Standard rear dropouts	All	Thru Axle
Rear axle dimensions	All	142 mm
Rear axle pitch thread	All	12 x 1.0
Seat post	All	Standard 27.2 mm
Seat post clamp	All	Built-in shim
Derailleur	All	Carbon monocoque
Derailleur angle	All	66-63º

Característica	Modelos	Especificación
Maximum large chain ring size	All	55 teeth
Minimum large chain ring size	All	46 teeth
Minimum small chain ring size	All	34 teeth
Maximum small chain ring size	All	42 teeth
Compatible with the triple chain ring	All	No
Minimum Q-Factor	All	145 mm
Maximum chainset length	All	177mm
Derailleur	All	Removable Ultralight
Compatibility with transmissions	All	Shimano (mechanical and electronic), Sram (only electronic) and Campagnolo (only electronic).
Front brake	All	160 mm
Minimum/maximum rear disc diameter	All	140 mm min / 160 mm max
Cabling	All	Internal ACR system
Bottle holder	All	2
Compatible with mudguard	All	No
Compatible with pannier rack	All	No
Compatible with child seat	All	No
Compatible with trailer	All	No
Potentiometer compatibility	All	Yes
UCI Legal Certified	All	Yes
Maximum recommended weight (cyclist+equipment+bags)	All	120 kg (marked on the wheels)

DIMENSIONS OF THE STEERING TUBE

ALL MODELS

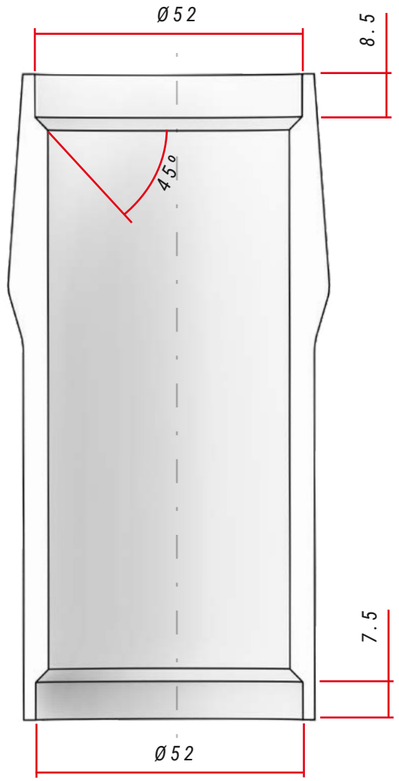

STEERING SPECIFICATIONS

	Type	Contact angle with the compression ring / fork track	Bearing dimensions
Upper	1.5" Steerer	45º	52x40x7
Lower	1.5" Steerer	45º	52x40x7

HEADSET ASSEMBLY

ALL MODELS

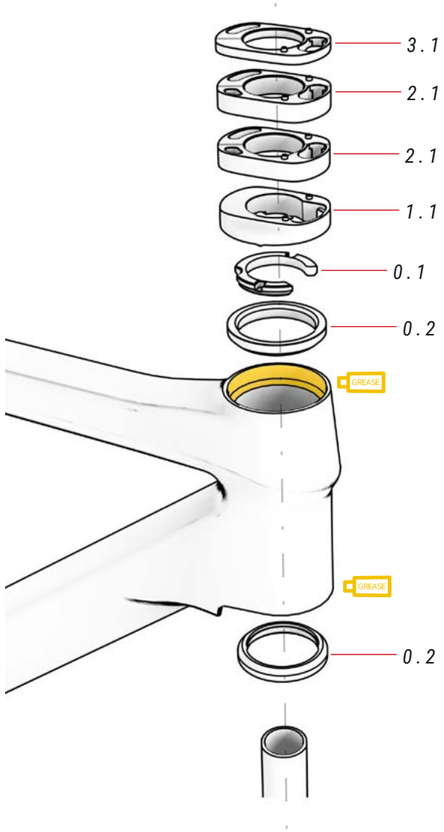

⚠ Carbon forks must never be mounted with a spindle. The spindle may force the fork with a pressure for which it has not been designed. It may break and cause an accident.

Always mount the fork with an expander.

00 HEADSET

ref.: 383240700

No.	Item	Quantity
0.1	Compressor	1
0.2	Bearing	2
0.3	Washer (Do not assemble)	1
0.4	Expander	1

01 ACR STEERING COVER

ref.: 383240800

No.	Item	Quantity
1.1	Steering cover 10 mm	1

02 ACR SPACER

ref.: 383240900

No.	Item	Quantity
2.1	Spacer 10 mm	2

03 ACR SPACER

ref.: 383241000

No.	Item	Quantity
3.1	Spacer 5 mm	1

EVO SL MONOCOQUE

LC507

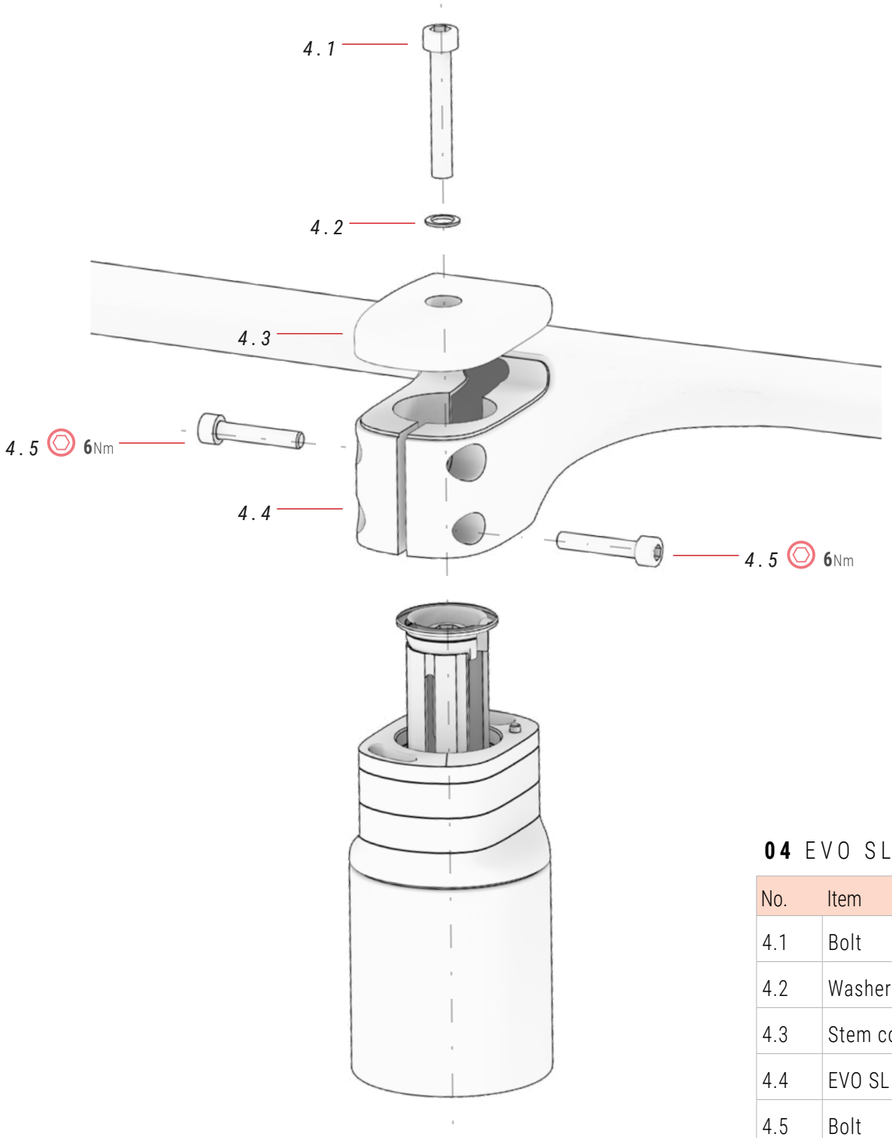

04 EVO SL MONOCOQUE

No.	Item	Quantity
4.1	Bolt	1
4.2	Washer	1
4.3	Stem cover	1
4.4	EVO SL monocoque	1
4.5	Bolt	2

CABLING OF THE ELEMENTS OF THE MONOCOQUE

LC507

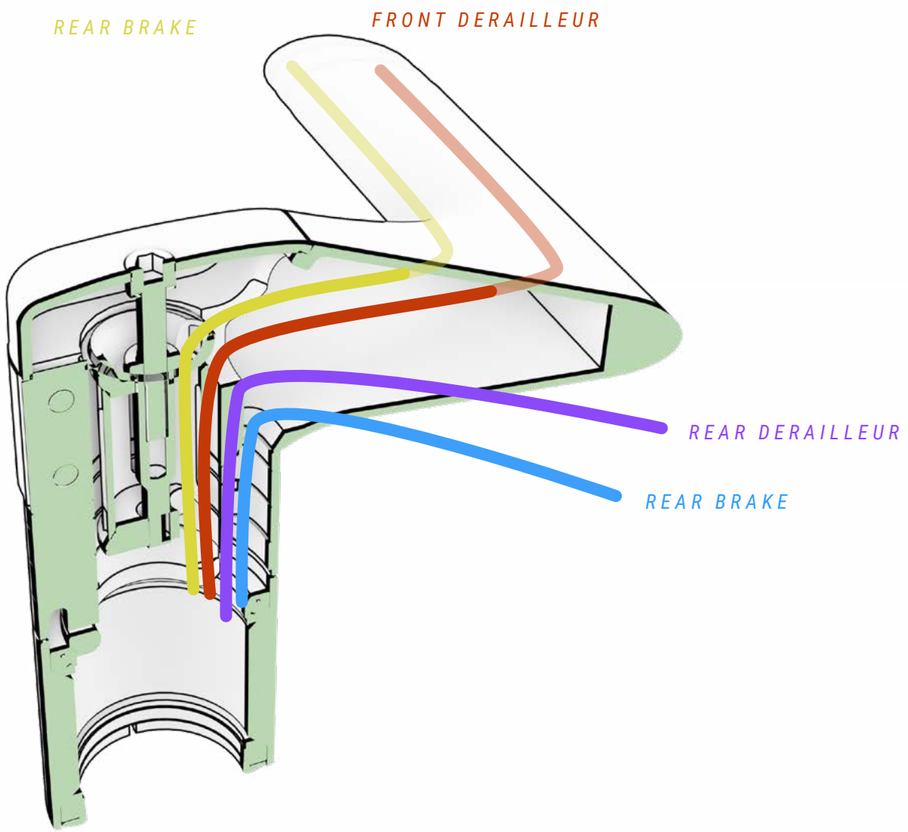

SMR STEM

LC407 / LC307

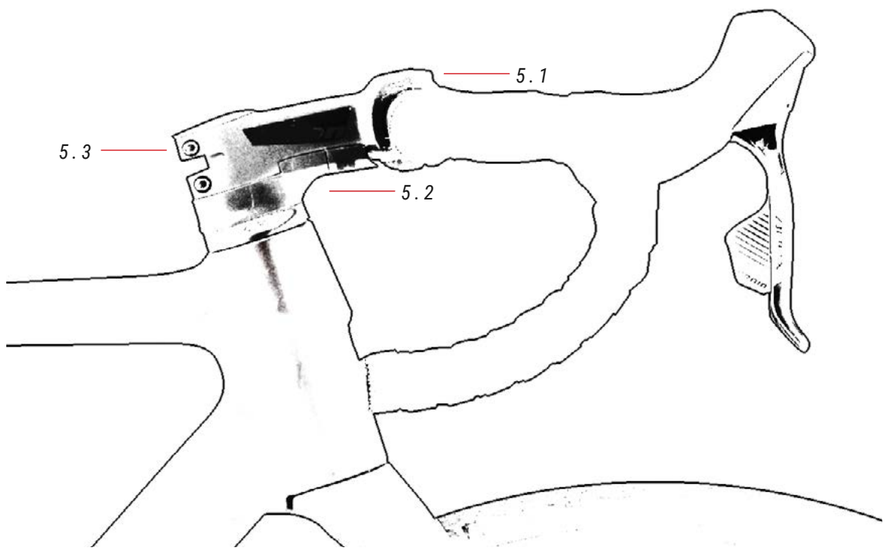

05 STEM ref.: *363300600*

No.	Item	Quantity
5.1	Stem	1
5.2	Cover	1
5.3	Screw	2

FRONT AXLE MOUNTING

ALL MODELS

⚠ Tightening the axle without the wheel in place may cause the carbon to break behind the housing.

It is advisable to avoid tightening the axle for bicycle transport.

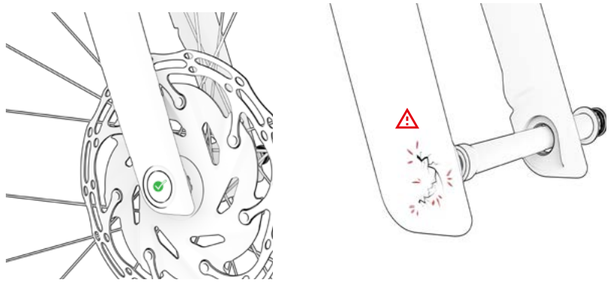

HANGER

ALL MODELS

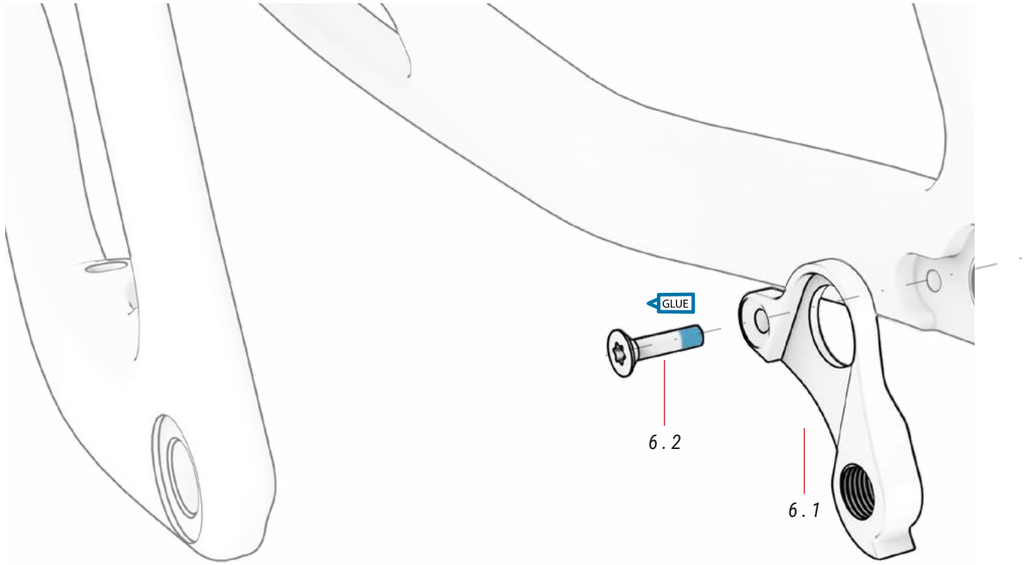

06 HANGER

No.	Item	Quantity
6.1	Hanger	1
6.2	Bolt M4xP0.7x10.5mm	1

LC405 ref.: *391780000*

LC505 LC305 ref.: *391780100*

MOUNTING THE BUILT-IN LOCK ON THE SADDLE'S SEAT POST

ALL MODELS

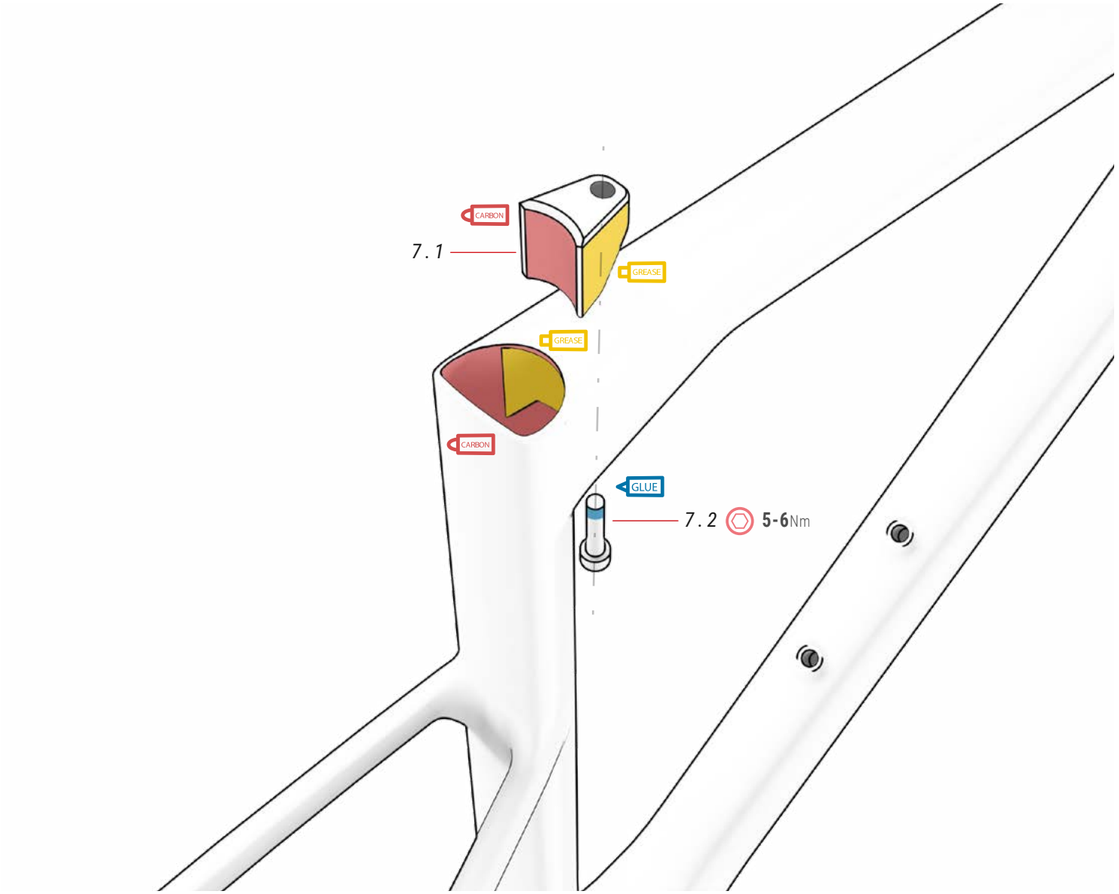

07 BUILT-IN CLAMP *ref.: 391792400*

No.	Item	Quantity
7.1	Shim	1
7.2	Bolt M6xP1.0x25mm	1

DERAILLEUR BRACKET

ALL MODELS

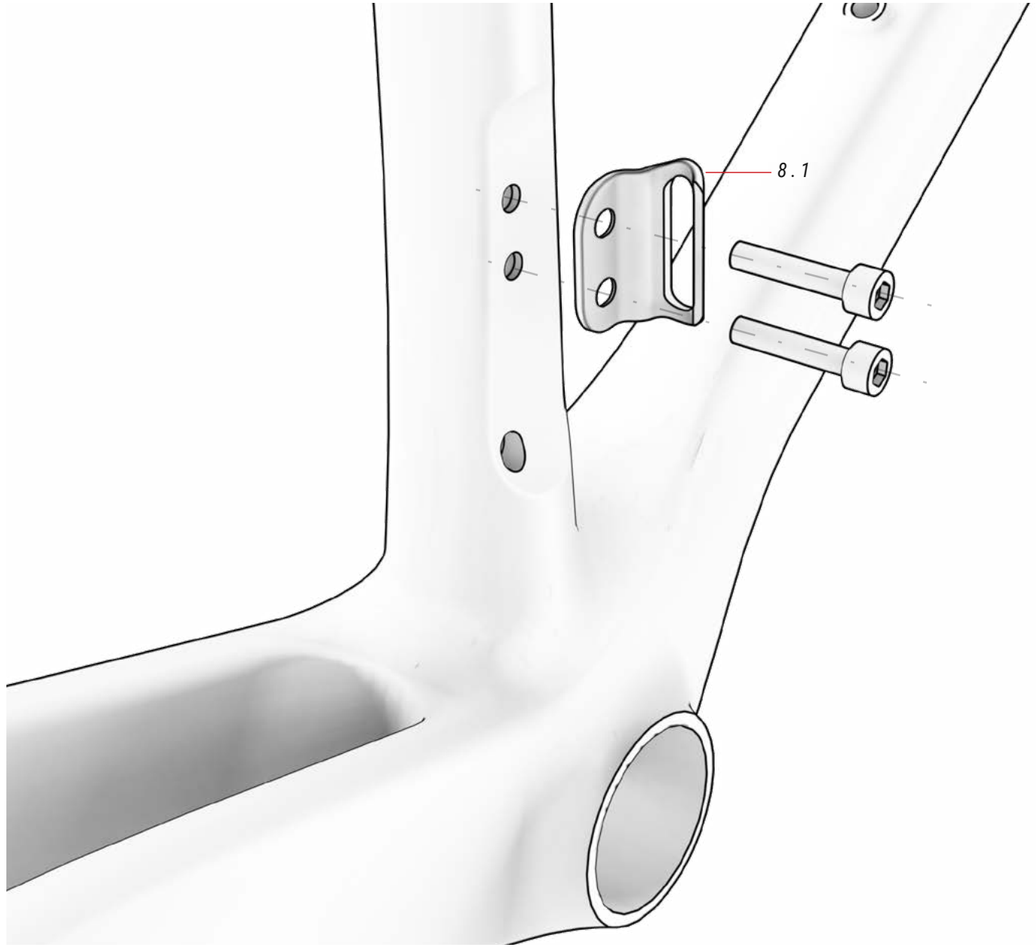

08 DERAILLEUR BRACKET *ref.: 391780200*

No.	Item	Quantity
8.1	Derailleur bracket	1

TOOLBOX

ALL MODELS

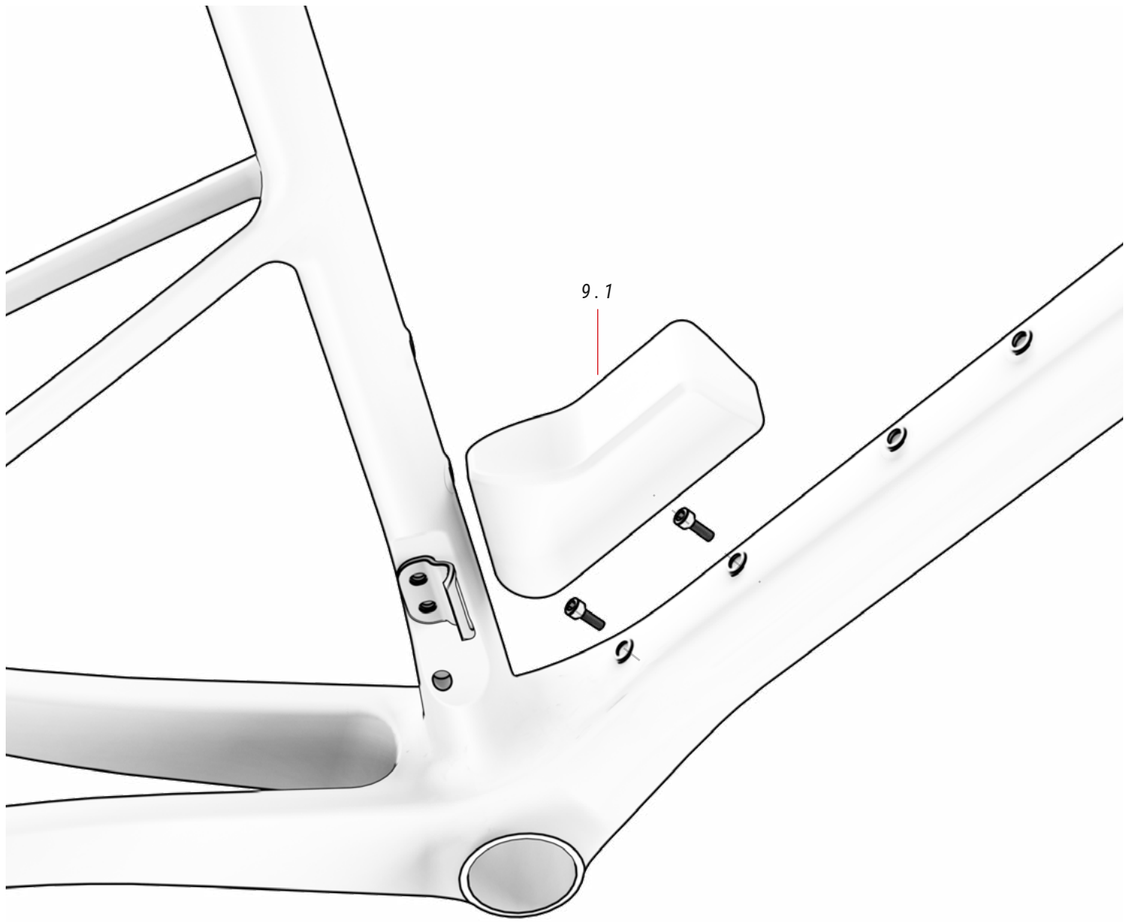

09 TOOLBOX

No.	Item	Quantity
9.1	Toolbox	1

BOTTLE HOLDER

ALL MODELS

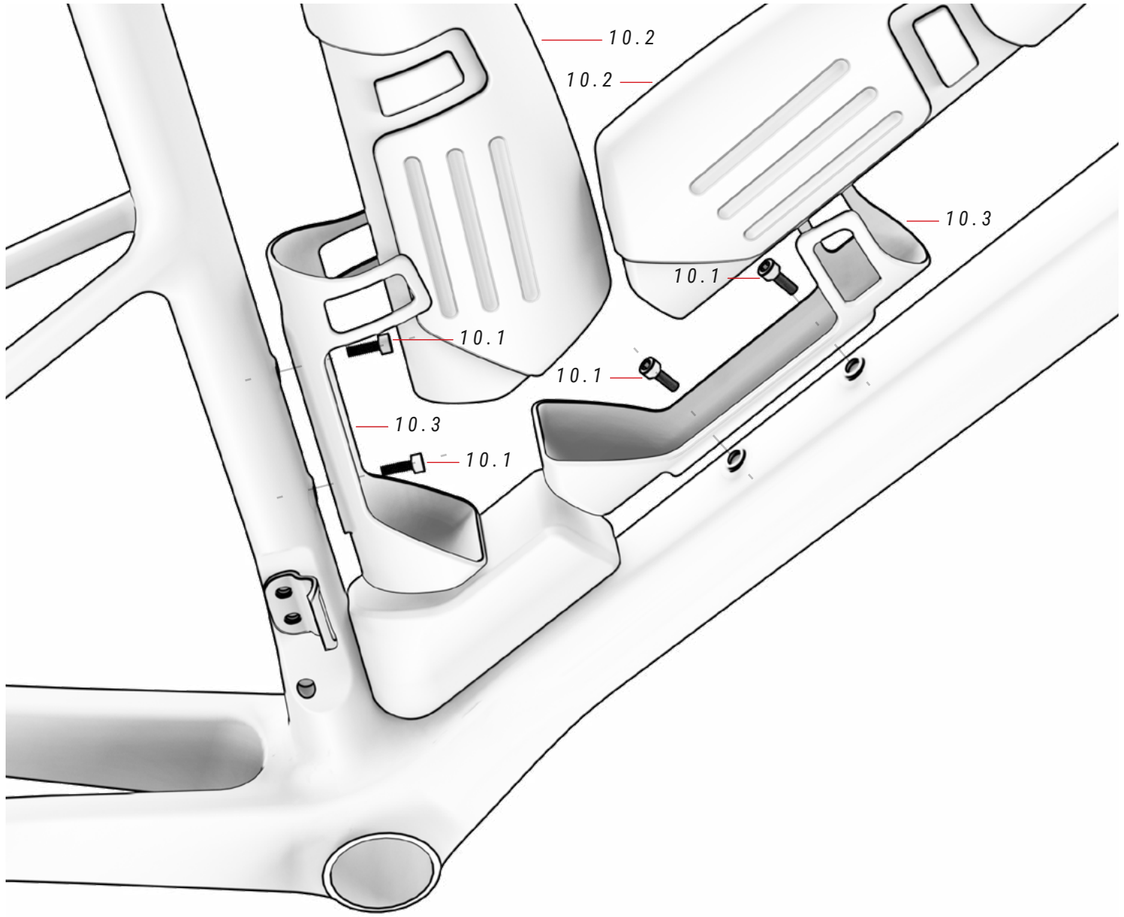

10 BOTTLE

No.	Item	Quantity
10.1	Screw M5xP0.8x18mm	4
10.2	Bottle	2
10.3	Bottle holder	2

MOUNTING THE SHIMANO DI2 IN BOTTOM BRACKET SHELL

LC507

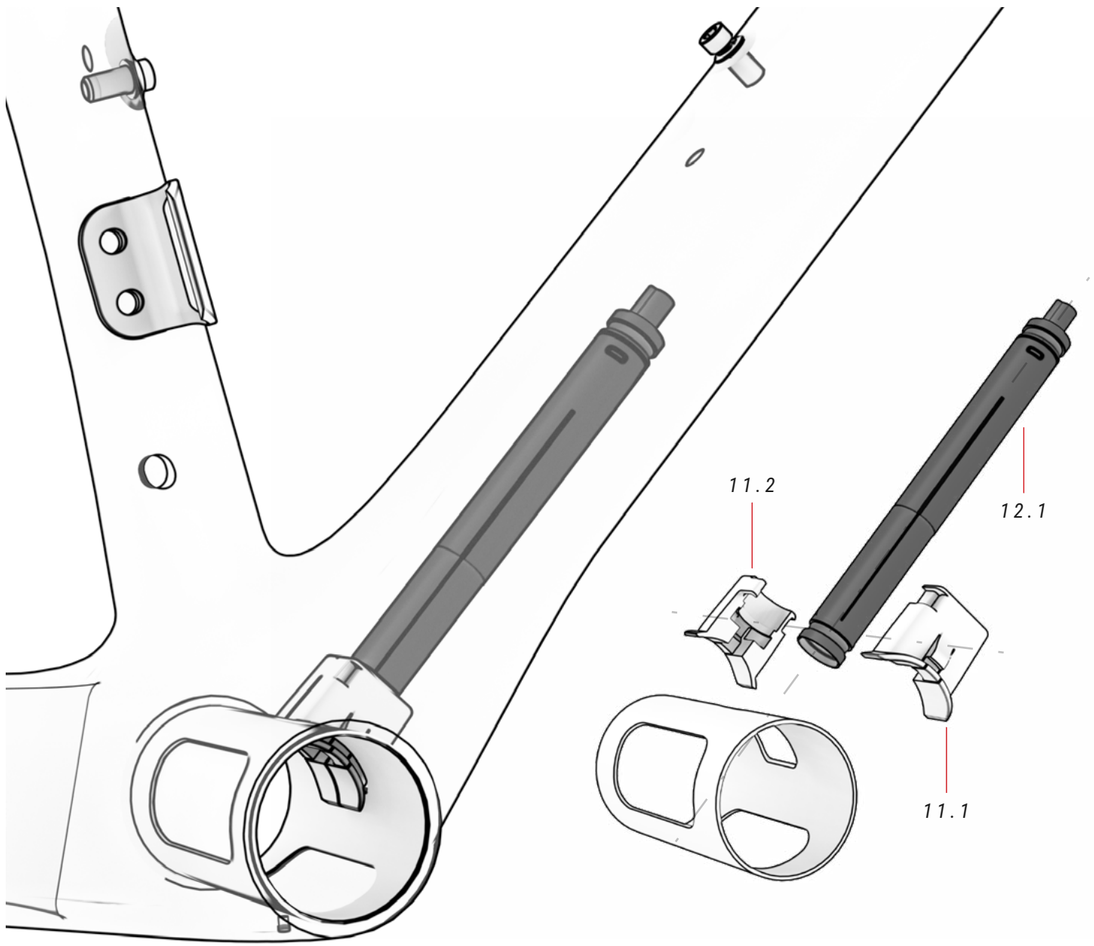

11 DI2 BOTTOM BRACKET HOLDER

No.	Item	Quantity
11.1	Right holder	1
11.2	Left holder	1

12 Di2 SHIMANO

No.	Item	Quantity
12.1	Di2 Shimano	1

Step-by-step mounting of the Di2 battery on the bottom bracket:

1. INSERT DI2 THROUGH THE STEERER TUBE INTO THE DIAGONAL TUBE.

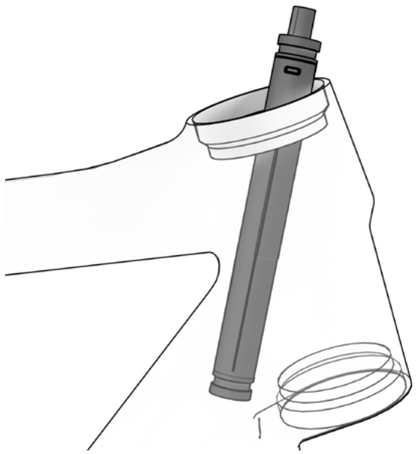

2. PULL THE END OF THE BATTERY OUT OF THE BOTTOM BRACKET SHELL HOLE.

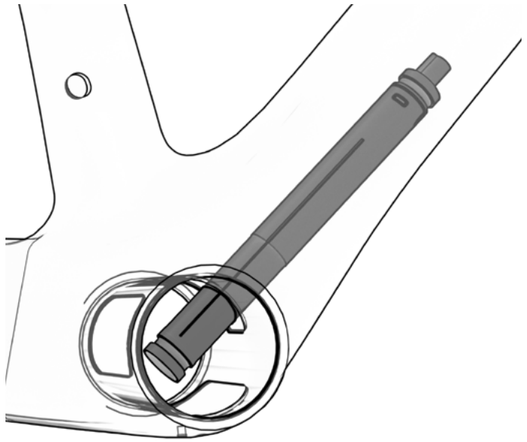

3. ATTACH THE PLASTIC PARTS TO THE BATTERY.

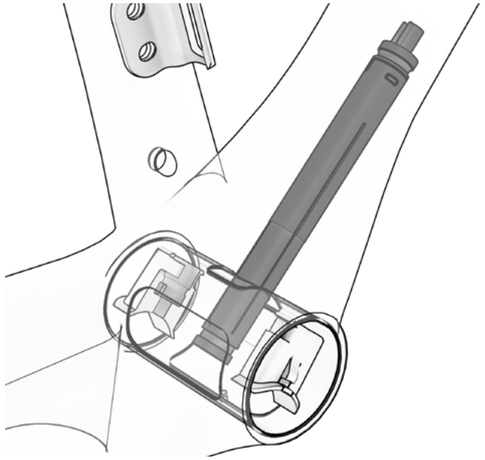

4. INSERT THE PLASTIC PARTS INTO THE HOLE UNTIL THE ASSEMBLY IS FIXED..

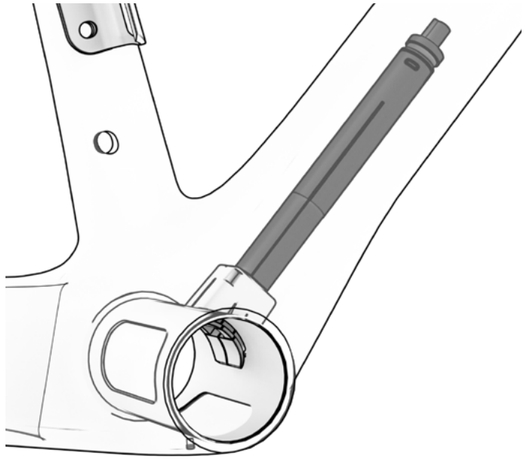

MOUNTING OF THE SHIMANO DI2 ON THE SEAT POST

LC507

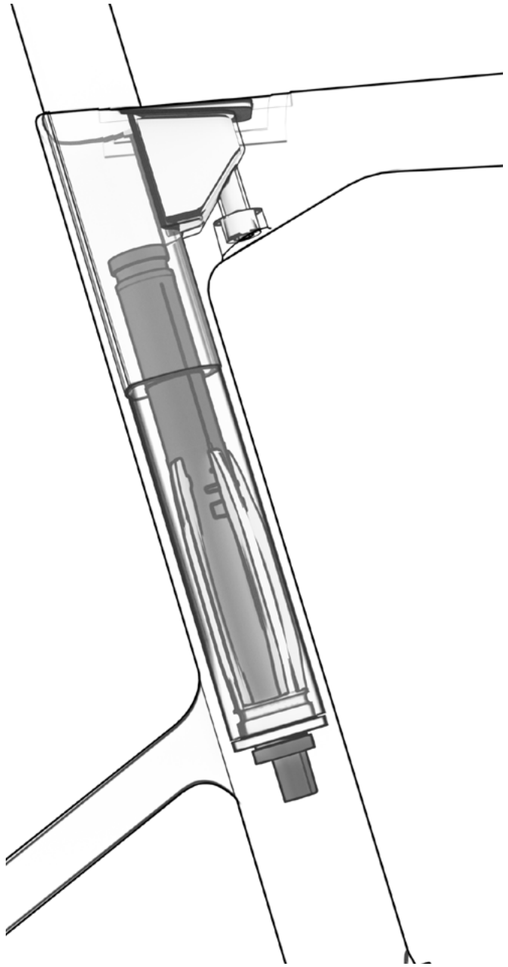

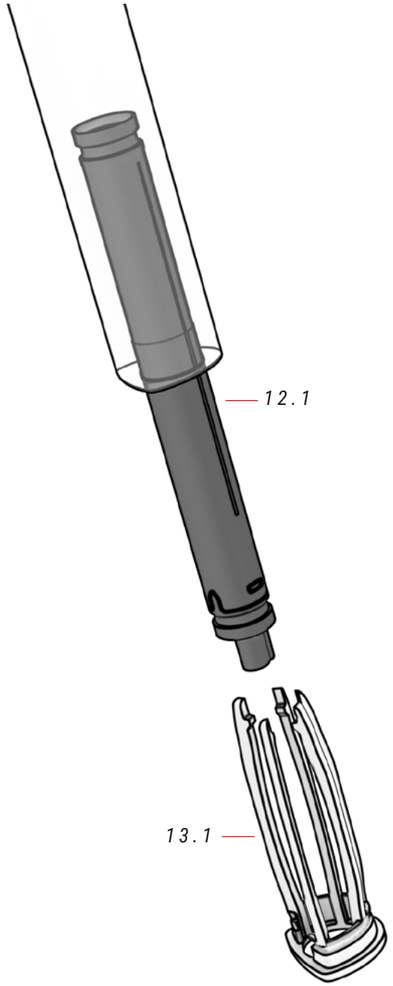

13 DI2 SEATPOST MOUNT ref.: *387458500*

No.	Item	Quantity
13.1	Di2 27.2mm seatpost holder	1

12 Di2 SHIMANO

No.	Item	Quantity
12.1	Di2 Shimano	1

REAR LIGHT

ALL MODELS

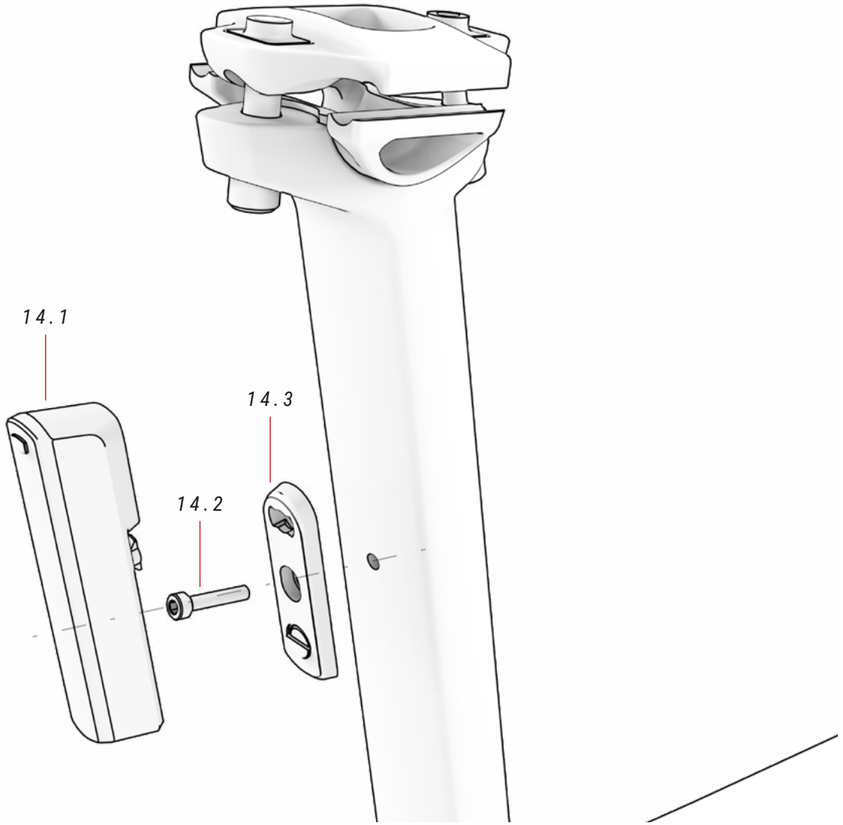

14 REAR LIGHT ref.: *387435700*

No.	Item	Quantity
14.1	Rear light	1
14.2	Bolt	1
14.3	Magnetic coupling	1
14.4*	Frame coupling **(does not assemble on Ultralight models)**	1

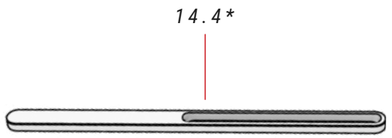

CABLING OF THE MECHANICAL PARTS

ALL MODELS

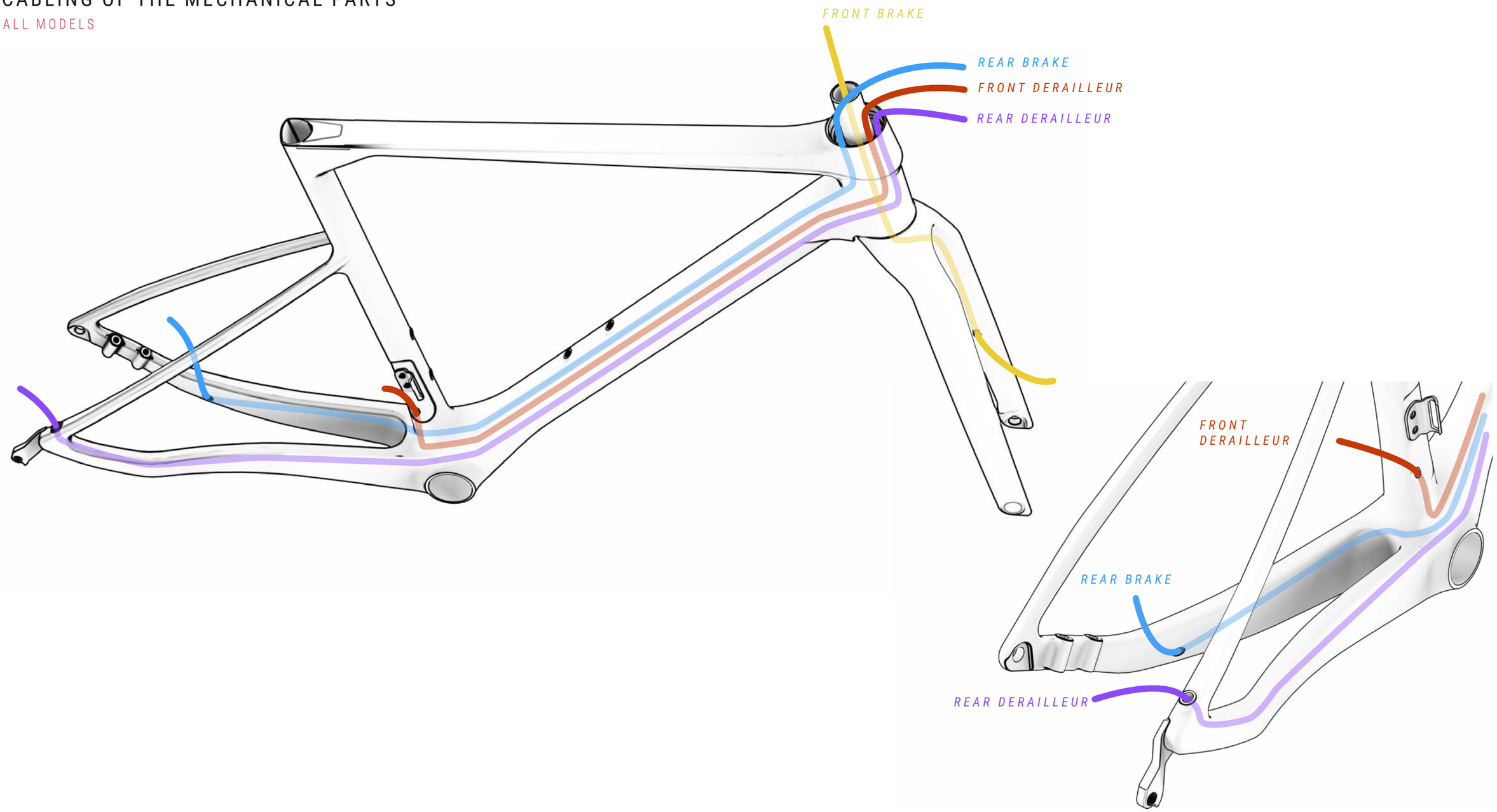

08 DECLARATION OF CONFORMITY

Declaration of Conformity

The manufacturer:

BH BIKES EUROPE, SL
c/ Perretagana 10,
01015 Vitoria, Spain

Hereby declares that the following products:

Product description: Bicycles
Models' designation:

MOUNTAIN BICYCLES:

LYNX TRAIL 9.5, LYNX TRAIL 9.0, LYNX TRAIL 8.0, LYNX TRAIL 7.0, LYNX RACE 9.9, LYNX RACE 9.5, LYNX RACE 9.2, LYNX RACE 9.0, LYNX RACE 8.5, LYNX RACE 8.0, LYNX RACE 7.5, LYNX RACE 7.0, LYNX RACE 6.5, LYNX RACE 6.0, LYNX RACE 4.0, LYNX RACE 3.0, LYNX SLS 9.5, LYNX SLS 9.0, LYNX SLS 8.5, LYNX SLS 8.0, LYNX SLS 7.5, LYNX SLS 7.0, LYNX SLS 6.5, LYNX SLS 6.0, ULTIMATE 9.5, ULTIMATE 9.0, ULTIMATE 8.5, ULTIMATE 8.0, ULTIMATE 7.7, ULTIMATE 7.5, ULTIMATE 7.0, ULTIMATE 6.5, ULTIMATE 6.0, EXPERT 5.5, EXPERT 5.0, EXPERT 4.5, EXPERT 4.0, SPIKE 3.0, SPIKE 2.5, SPIKE 2.0, SPIKE 1.0.

RACING BICYCLES:

ULTRALIGHT 9.0, ULTRALIGHT 8.0, ULTRALIGHT 7.0, ULTRALIGHT 6.0, AEROLIGHT 9.0, AEROLIGHT 8.0, AEROLIGHT 7.0, AEROLIGHT 6.0, RS1 5.5, RS1 5.0, RS1 4.5, RS1 4.0, RS1 3.5, SL1 4.5, SL1 4.0, SL1 3.5, SL1 3.0, QUARTZ 1.5, QUARTZ 1.0, AEROTT 8.0, AEROTT 7.0, AEROTT 6.0, GRAVELX CARBON 6.5R, GRAVELX CARBON 6.0AT, GRAVELX CARBON 5.5R, GRAVELX CARBON 5.0AT, GRAVELX CARBON 4.5R, GRAVELX CARBON 4.0AT, GRAVELX CARBON 3.5R, GRAVELX CARBON 3.0AT, GRAVELX CARBON 2.5 R, GRAVELX CARBON 2.0AT, GRAVELX 2.5, GRAVELX 2.0, GRAVELX 1.8, GRAVELX 1.5, GRAVELX 1.0, RX TEAM 5.0, RX TEAM 4.0, RX TEAM 3.0

CITY AND TREKKING BICYCLES:
OXFORD, OXFORD JET, OXFORD JET LITE, OXFORD JET PRO, OXFORD LITE, OXFORD PRO, SILVERTIP, SILVERTIP JET, SILVERTIP JET LITE, SILVERTIP JET PRO, SILVERTIP LITE, SILVERTIP PRO.

YOUNG CHILDREN AND YOUNG ADULTS BICYCLES:
EXPERT 26" DISC, ESPERT JUNIOR 14", EXPERTE JUNIOR 16", EXPERT JUNIOR 18", EXPERT JUNIOR 20", EXPERT JUNIOR 20" PRO, EXPERT JUNIOR 20" SUS, EXPERT JUNIOR 24", EXPERT JUNIOR 24" DISC, EXPERT JUNIOR 24" PRO, EXPERT JUNIOR 26", EXPERT JUNIOR 26" PRO.

Year of manufacture: 2026 and 2027

Comply with all of the relevant requirements of RD 339/2014, de 9 de Mayo.
Production control is assured by our Quality Management System, which fulfills the requirements of the standard ISO 9001

The following harmonized standards have been applied:
ISO 4210-1/2/3/4/5/8/7/8/9 – Safety requirements for bicycles
ISO 8098 Safety requirements for bicycles for young children
EN 16054 BMX bicycles. Safety requirements and test methods

Technical documentation filed at:
BH BIKES EUROPE, SL
C/ Perretagana 10,
01015 Vitoria, Spain

Prepared and reviewed by the BH Quality Department (Headquarters)

Rev. 15 08/06/2025 Pag. 1 of 1

09 HELP AND ADDITIONAL RESOURCES

BH offers different channels to resolve your queries. In addition, you can join our global cyclist community on our social media.

TECHNICAL RESOURCES

You can find all of the resources you need to fine-tune your bicycle on the BH Bikes website. Click on the link below to access the user manuals, apps, warranties, display update files and videos that explain different operations:

https://www.bhbikes.com/manuals

You can also check out our step-by-step tutorials to learn how to maintain and fine-tune your bicycle on our specialised Youtube channel:

https://www.youtube.com/user/ServicioTecnicoBH

CONTACT US

Our authorised dealers have the necessary knowledge and resources to help you with anything you need in relation to your bicycle. Don't hesitate to contact your nearest store. You can find it by clicking on the link below:

https://www.bhbikes.com/es_INT/tiendas/buscador-de-tiendas

To contact us directly:

Tel.: + 34 945 13 52 02

info@bhbikes.com

P.I. Jundiz- Perretagana 10, 01015 Vitoria, Alava (Spain)

SOCIAL MEDIA

Join our global cyclist community. Discover the BH experiences of other cyclists and share yours.

www.bhbikes.com | YouTube

BH