TekDoc

USER MANUAL

2027

ULTIMATE

BH

CONTENTS

01 INTRODUCTION 3
- SYMBOLS 3

02 BH WARRANTY 4
- LIFETIME FRAME WARRANTY 4
- REGISTERING THE LIFETIME FRAME WARRANTY 5
- SUBMITTING A WARRANTY CLAIM 5

03 MAINTENANCE 5
- INSPECT THE BICYCLE BEFORE USE 5
- KEEP THE BICYCLE CLEAN 6
- KEEP THE TRANSMISSION LUBRICATED AT ALL TIMES 6
- PART MAINTENANCE 6
- SPARE PARTS 7
- AFTER A FALL, BLOW OR IMPACT 7

04 WARNINGS ON USE 8
- MAXIMUM TYRE SIZE 8
- MINIMUM AND MAXIMUM INSERTION LENGTH OF THE SEAT POST 8
- MAXIMUM FORK LENGTH (AXLE-TO-CROWN) 8
- MAXIMUM NUMBER OF STEERING SPACERS 8
- POSITION OF THE SPINDLE INSIDE THE FORK TUBE 8
- INTENDED USE 8

05 SIZES AND DIMENSIONS 8

06 TECHNICAL SPECIFICATIONS 9

07 ASSEMBLY AND SPARE PARTS 10
- DIMENSIONS OF THE STEERING TUBE 10
- HEADSET ASSEMBLY 10
- FIT STEM ASSEMBLY 11
- MOUNTING THE BH FIT TOOL 11
- FIT STEM MOUNT WITH THE SPIDER 12
- MOUNTING THE BUILT-IN LOCK ON THE SADDLE'S SEAT POST 13
- UDH HANGER 13
- CHAIN STAY PROTECTOR 14
- CABLING OF THE MECHANICAL PARTS 15

08 DECLARATION OF CONFORMITY 16

09 HELP AND ADDITIONAL RESOURCES 16

01 INTRODUCTION

This user manual contains important information for proper use and maintenance of the bicycle. In particular, this document contains specific information about the ULTIMATE (A7597 / A7097 / A6597 / A6097). Please read the entire manual carefully. The user manuals of all BH models can be consulted on the website at the following address:

https://www.bhbikes.com/manuals

Keep in mind that the manuals on the BH BIKES website are updated on a regular basis. Make sure you have downloaded the latest version from the website. You can check the version on the front page.

This document contains additional information to the general user manual, available at:

https://www.bhbikes.com/es_INT/quienes-somos/manuales-descargas

You can check the characteristics, recommendations and warranties of third-party parts on their corresponding official websites.

SYMBOLS

This document contains different icons that refer to use, maintenance and assembly warnings. Carefully read the meaning of each one to prevent improper handling or hazardous situations that may result in serious personal injuries or fatal accidents.

SAFETY

DANGER: refers to a hazardous situation that, if not avoided, will lead to serious injuries or even a fatal accident.

WARNING: refers to a hazardous situation that, if not avoided, could lead to serious injuries or even a fatal accident.

ATTENTION: refers to a hazardous situation that, if not avoided, could cause minor or moderate injuries.

RISK OF ELECTRIC SHOCK: refers to a hazardous situation that, if not avoided, could cause serious injuries due to electric shock or even death.

RISK OF SHORT CIRCUIT: refers to a hazardous situation that, if not avoided, could cause short circuits in the electrical components. Short circuits may cause damage to the electrical components and fire.

TOOLS

FLAT WRENCH

ALLEN KEY

TORX KEY

PHILLIPS SCREWDRIVER

10Nm **TIGHTENING TORQUES:** on one side of each tool symbol, the tightening torque will be indicated in newton metre.

TYPE OF ASSEMBLY COMPOUND

OIL: light lubrication for elements such as chains and cables.

GREASE **GREASE:** assembly grease.

CARBON **CARBON PASTE:** assembly paste used to increase the friction of the carbon elements.

GLUE **ADHESIVE:** use medium strength thread lock.

Adhesive is used to fasten bolts and make sure that they do not come loose due to vibrations when using the bicycle. Add a drop of thread lock to the tip of the screw thread in all cases. Never apply more than one drop around the thread, since this will make it very hard to remove the bolt.

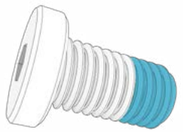

02 BH WARRANTY

BH BIKES undertakes to offer long-lasting bicycles, in compliance with the highest standards of quality. Therefore, in addition to the statutory warranty, BH BIKES offers an additional coverage and warranty. This section defines the different types of warranty and the process that must be followed to register for the additional "LifeTime Frame" warranty.

STATUTORY WARRANTY

The statutory warranty covers the original purchaser in the event of manufacturing defects and/or non-conformities. This warranty applies to frames and components manufactured by BH BIKES. The warranty period will be established according to the current laws of the country where the bicycle was purchased, and will start on the date of purchase. During this period, the holder of the warranty will be entitled to have all manufacturing defects repaired or replaced free of charge, including the reimbursement of transport expenses and any losses caused as a result of this. Different conditions must be met in order to be covered by the warranty:

- This warranty does not affect the consumer's applicable rights, according to the current laws in each country.
- Faulty bicycles or parts will be covered by warranty upon the decision of our Technical Service.
- The warranty does not include the replacement of parts prone to wear and arising from normal use of the bicycle.
- The warranty does not cover defects or broken parts due to improper use of the bicycle, use for competitions, mounting of non-original accessories or improper handling and incorrect maintenance work.
- The warranty does not apply if the inspection before delivery and the corresponding inspection intervals included in this document have not been carried out, observed, documented as required and stamped by an authorised BH dealer.
- Should the repair not be satisfactory and not ensure that the optimum conditions are met according to the intended use, the holder of the warranty will be entitled to request the replacement of the purchased item or faulty part with one of identical characteristics, or to receive a refund of the amount paid for the damaged item or part.
- The warranty period will be interrupted during the repairs or, in the event of replaced items or components, it will be renewed.
- Any claim against this warranty shall expire six months after the end of the warranty validity period.
- All warranty claims must be processed by an authorised dealer.
- Geographical scope: refer to the User Manual or www. BHbikes.com

Visit the following link to read the terms and conditions:

https://www.bhbikes.com/es_INT/registro-garantia-vida-bh/registra-tu-bici-garantia-de-por-vida

LIFETIME FRAME WARRANTY

Through its authorised stores, BH Bikes provides the original buyer with a commercial policy to cover any manufacturing defects in frames for a period beyond that specified in the product's statutory warranty, pursuant to the following clauses:

1. **The LIFETIME warranty solely applies to BH frames and bikes that are sold through stores that are authorised by BHBIKES EUROPE S.L.**
   - The buyer must register the LIFETIME warranty online, with the information duly completed, within 30 calendar days of the purchase date, as it appears on the invoice issued by the authorised store.
   - This warranty cannot be transferred to subsequent buyers and it is cancelled when the bicycle is sold to a third party. Original buyer means the individual who registers the warranty at the time of the purchase; the commercial warranty cannot be transferred to third parties who are not the original buyer.
   - It shall be compulsory to have the bicycle serviced in an establishment that is authorised by BHBIKES EUROPE and according to the instructions in the user manual.
2. **The LIFETIME warranty does not cover:**
   - The rear swingarms of the double suspension models, fork, kids' bikes, defects and/or fading of the original paint, or rust caused by natural deterioration.
   - Defects or breakages resulting from an accident or improper and/or negligent use of the bicycle.
   - When components or accessories that are not intended for or are not compatible with the use for which the bicycle was designed have been installed.
   - Defects resulting from improper handling.
   - Scratches, discolouration, or stains caused by the use of abrasive fluids, sharp items, clamps and/or prolonged exposure to sunlight or other weather conditions.
   - Defects caused by the bicycle's normal wear and tear, including those due to material fatigue. Fatigue damage is a sign that the frame has been damaged by normal use, so it is the user's responsibility to regularly inspect the bicycle.
   - Improper use and/or maintenance of the product (carefully read the recommendations for use and cleaning).
   - Frames that have been used in competitions, demos or as rentals.

Read the full terms and conditions at:

https://www.bhbikes.com/es_INT/registro-garantia-vida-bh/registra-tu-bici-garantia-de-por-vida

REGISTERING THE LIFETIME FRAME WARRANTY

You must register the bicycle within 30 days of purchase to enjoy the BH BIKES extended warranty. Follow the steps below to activate the LIFETIME FRAME extended warranty:

- LIFETIME FRAME WARRANTY

You must register the bicycle on the BH BIKES website to enjoy the LIFETIME FRAME extended warranty:

https://www.bhbikes.com/es_INT/registro-garantia-vida-bh/registra-tu-bici-garantia-de-por-vida

Watch this video to find out what you need to do:

https://youtu.be/47aLVgUI248

The serial number required to register the bicycle is located on the bottom of the bicycle, on the seat tube, above the bottom bracket:

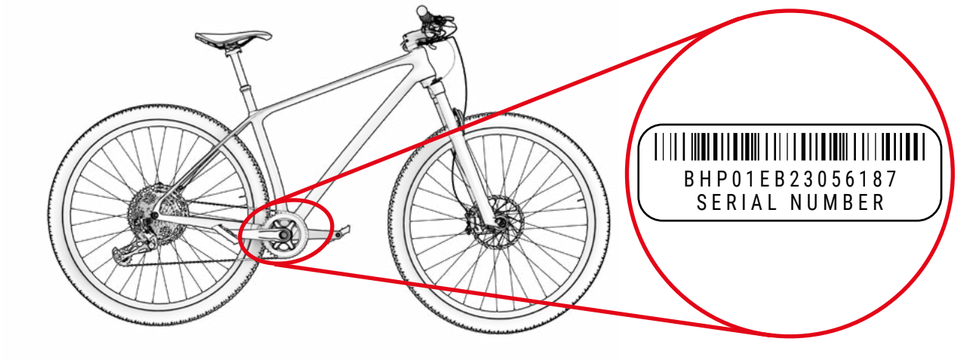

SUBMITTING A WARRANTY CLAIM

All warranty claims must be channelled through an official BH dealer. The dealer will analyse the claim to identify its scope and perform a preliminary assessment of the incident. The dealer will submit and process the claim directly with BH. Once BH has defined the corrective measures required, the dealer will send this information to the customer.

All claims must be processed by the official dealer from which you purchased your bicycle. If this is not possible, please contact us directly. We will help you find an authorised dealer near you:

https://www.bhbikes.com/es_INT/quienes-somos/contacto

03 MAINTENANCE

This user manual contains important information for ULTIMATE (A7597 / A7097 / A6597 / A6097). Please read the entire manual carefully. The user manuals of all BH models can be consulted on the website at the following address:

https://www.bhbikes.com/manuals

This document contains additional information to the general user manual, available at:

https://www.bhbikes.com/manuals

You can check the characteristics and recommendations of third-party parts on their corresponding official websites.

INSPECT THE BICYCLE BEFORE USE

Bicycles are inspected several times throughout the manufacturing process and then at the BH workshop during the final check. As the bicycle's operation may be affected during transport or third parties may have modified the bicycle before its sale, the following must be checked before each trip:

- FRAME: no cracks, damage or strange noises.
- CHAIN: it must be lubricated and the transmission system must not make any strange noises.
- BRAKES: the brakes must be working properly. When stopped, press the brake lever with enough strength and check that it does not touch the handlebars.
- TYRES: the pressure must be correct and there must be no cuts on the tread or on the sides. Also check that the wear level does not exceed the maximum recommended level.
- WHEELS: the wheels must rotate freely in order to check how they rotate. Also check the space between the brake lining and the rim, as well as the space between the frame and tyre.
- STEERING: the steering must turn smoothly and with no strange noises.
- SWINGARM ROTATION POINTS: when weight is exerted on the bicycle, the suspension must work as expected and with no strange noises. If it is not working properly or there is play between the moving parts, this might mean that the tightening torques are incorrect or that the bearings are worn.
- BEARINGS: the bearings must work properly and with no strange noises. The bearings are subject to wear and must be replaced to prevent damage to the components on which they are installed.
- ELECTRICAL SYSTEM: if the bicycle features an electrical system, check that it is functioning properly by ensuring that the electrical assistance mode is running and that all parts are functioning properly (motor, display, change of assistance mode and speed sensor). If there is no electrical assistance, check that all connections are correct and show no signs of damage.

Do not ride your bicycle if it does not meet any of these points! A faulty bicycle may cause serious accidents! If you are unsure or have any queries, please contact your nearest BH workshop!

Check the tightening torques to make sure that they are as described in the recommendations in the user manuals. Failure to observe these recommendations may result in accidents and even death.

The effect of the ground and the forces exerted on the wheel subject the bicycle to a lot of stress. The different parts will be subject to fatigue and wear because of these dynamic loads. Check the bicycle at regular intervals to look for signs of wear, scratches, bent parts, wear on the finish or the formation of cracks. Parts may fail suddenly after their service life has expired. Take your bicycle to an authorised BH workshop regularly to have these parts replaced if needed.

KEEP THE BICYCLE CLEAN

We recommend you follow these basic prevention measures to make sure that the bicycle is in perfect working order. Failure to observe these recommendations may lead to premature wear or even breakages in specific areas, such as gaskets or moving parts.

- Clean the dust and mud with a damp sponge and a gentle and neutral cleaning product.
- Plastic parts must only be washed with soapy water.
- Tyres can be washed with a sponge or brush and soapy water.
- After cleaning the bicycle, dry it by rubbing it firmly with a smooth cloth.
- After each cleaning, lubricate the transmission elements.

Dirt may cause damage that can result in accidents or even death.

Never use pressure washers or steam cleaners.

KEEP THE TRANSMISSION LUBRICATED AT ALL TIMES

After washing the bicycle, the chain transmission's lubrication may have also been washed off. Inspect and lubricate the chain's links, if needed. Excess lubrication may attract more dirt, causing premature wear and incorrect functioning of the system.

Never use pressure washers or steam cleaners.

PART MAINTENANCE

The bicycle requires regular maintenance and a minimum number of regular inspections. The frequency of the maintenance operations depends on the type of vehicle (leisure, road or mountain bike), as well as the frequency and conditions of use.

PART MAINTENANCE CALENDAR

Part	Action required	Before each outing	Monthly	Annually
Lighting	Functional check.			
Tyres	Pressure check.			
	Inspect the height of the profile and sides.			
Brakes (on the rim)	Check the lever travel, lining strength and rim position.			
	Brake test when stopped.			
	Clean the brake pads.			
Brake cables	Visual inspection.			
Brakes (disc brakes)	Change the brake fluid (DOT fluid).			
Suspension fork	Check the bolts and the corresponding tightening torque.			
	Change the oil and lubricate the elastomer.			
Saddle seat post with suspension	Maintenance.			
	Play check.			
Rims on rim brakes	Inspection and replacement, if needed, of the wall linings.	At the latest after the second part of the brake lining.		
Bottom bracket axle	Check the play.			
	Re-lubrication.			
Chain	Check and lubrication.			
	Check and replacement.	After 800 km.		
Chainsets	Check and tightening.			
Wheels / Spokes	Check wheel spin and spoke tension.			
Headset	Inspection of the headset.			
	Re-lubrication.			
Metal surfaces	Maintenance.	At least once every six months.		
Hubs	Bearing inspection.			
	Re-lubrication.			
Pedals	Bearing inspection.			
	Lubrication, cleaning the anchoring mechanism.			

Part	Action required	Before each outing	Monthly	Annually
Saddle seat post / Stem	Inspection of the fastening screws.			
Rear derailleur / Derailleur	Cleaning, lubrication.			
Quick-release mechanism / Thru-axle	Efficacy check.			
Nuts and bolts	Check and tightening.			
Spokes	Tension check.			
Stem / Saddle seat post	Removing and applying new assembly paste.			
Circuit / Brakes	Disassembly and greasing.			
Components of the electrical assistance system	Check the connections.			
	Check there is no dirt.			

You do not need to take the bicycle to an expert if you are skilled, experienced and have the appropriate tools. Immediately implement the corrective measures if you detect problems. If you are unsure or have queries, please contact BH.

The tasks described above must only be carried out by a trusted bike repair expert.

SPARE PARTS

Original parts must be used to ensure the optimum performance of your bicycle and the utmost safety. Failure to use original parts may cause damage that is not covered by the warranty.

The most common spare parts are parts prone to wear. The most common ones are tyres, inner tubes, brake pads, disc brakes and brake pads, as well as rims, when these are part of the brake unit, headlights, position lights, batteries and accumulators.

- **TYRES:** Replace them with an equivalent type of tyre. Check the marking on the outside of the tyre (ETRTO standard). Keep in mind that using a tyre with a larger outer diameter than the recommended one may cause the tip of the foot to touch the front wheel or rear wheel guard when the handlebars turn. The cyclist may lose control of the bicycle and suffer an accident with serious consequences. This can also occur when the pedal chainset is replaced with a longer one.
- **INNER TUBES:** Replace them with a suitable type of inner tube, according to the type of tyre. Refer to the information on the outside of the inner tube (ETRTO standard).
- **DISC BRAKES AND BRAKE PADS:** Follow the instructions supplied by the manufacturer.
- **HEADLIGHTS AND POSITION LIGHTS:** Replace the bulb with one of the same type. Check the indication on the metal area.
- **CHAIN, COG AND CHAIN RINGS:** Follow the instructions supplied by the manufacturer.
- **BATTERIES AND ACCUMULATORS:** Change for the same type. Check the indication on the outer area.

⚠ Remember that the failure to use original parts may cause damage that is not covered by the warranty.

AFTER A FALL, BLOW OR IMPACT

If you suffer a fall, blow or impact, first make sure that you are okay to continue cycling. Do not use the bike if you are injured and ask for medical assistance if needed.

If you are okay to continue cycling, check the bicycle to make sure that it is in perfect working order:

- Check that the wheels are firmly secured and that the rims are in the centre of the frame and fork. Turn the wheels. If they cannot be centred in situ because the gap is too small, separate the brakes from the rim so it can move freely.

⚠ In this case, keep in mind that the braking efficacy will be less.

- Check whether the handlebars or the front of the frame are twisted or broken. Check that the front is firmly seated on the fork, holding the front wheel firmly between your legs and trying to twist the handlebars with respect to the front wheel.
- Check that the chain is fitted correctly. If the bicycle fell onto the transmission side, check that it is working properly. Ask for help to place the bicycle on its saddle and change gears. When the chain fits on the largest cog, check the distance between the gear and the spokes. If the gear or bracket are bent, the first one may become stuck on the spokes - Danger of falling! The gear, rear wheel or frame may be damaged. Check the derailleur. If it has shifted, the chain may come off the gear. The bicycle's transmission will become less effective (also refer to the "Traction" section).
- Check the saddle, upper tube or the bottom bracket box to make sure that there are no defects.
- Lift the bicycle slightly and let it drop onto the ground. If there are any noises, inspect the bicycle for any loose bolts.
- Inspect the entire bicycle again to check for bent areas, worn finish or cracks.
- Ride again carefully if no problems have been detected during the inspection. Do not brake or accelerate suddenly or pedal when going uphill. If you are unsure, wait for a car to pick you up instead of risking an accident. Once home, you should inspect the bicycle carefully again. If you are still unsure or have any queries, please contact your nearest BH workshop!

⚠ Bent aluminium parts must not be straightened, i.e., they must not be repaired. Even afterwards, there is a high risk of breakage, especially in regards to the fork, handlebars, front part, chainsets and pedals. Replace them for greater safety.

04 WARNINGS ON USE

MAXIMUM TYRE SIZE

If you install a tyre of a different size on your bicycle, check and make sure that there are at least 6 mm between the tyre and other parts of the frame and fork.

MINIMUM AND MAXIMUM INSERTION LENGTH OF THE SEAT POST

Failure to observe the maximum and minimum seat post insertion dimensions indicated in this manual may cause a lever effect on the frame. The pressure exerted could damage the frame and cause serious accidents. The warranty does not cover the damage generated by failing to observe these indications.

MAXIMUM FORK LENGTH (AXLE-TO-CROWN)

Observe the maximum length between the fork axle and the lower part of the steering tube (axle-to-crown). If this maximum length is not observed, the frame could be damaged due to withstanding a greater load than that for which it was designed and may cause serious accidents.

MAXIMUM NUMBER OF STEERING SPACERS

This manual specifies the maximum number of steering spacers that can be fitted under the stem. If this maximum quantity is not observed, the materials could be damaged due to withstanding a greater load than that for which they were designed and may cause serious accidents.

POSITION OF THE SPINDLE INSIDE THE FORK TUBE

No steering spacers must be fitted above the stem. Otherwise, the materials could be damaged due to withstanding a greater load than that for which they were designed and may cause serious accidents.

INTENDED USE

Each bicycle has been designed according to a specific intended use. The models described in this manual meet the requirements associated with their intended use:

These refer to the conditions that guarantee the proper functioning of the bicycle, such as riding on difficult trails, unpaved paths and difficult terrain and trails that require technical skills. The maximum jumping and/or drop height is 61 cm (24").

05 SIZES AND DIMENSIONS

ALL MODELS

ULTIMATE

	H1	H2	H3	H4	H5	H6	H7	H8	A1	A2	REACH	STACK
SM	380	95	506	583.2	680.8	420	1092.7	65	75	68.5	410	605
MD	420	100	506	608.4	707.5	420	1119.4	65	75	68.5	435	610
LA	460	115	506	631.1	732.9	420	1145	65	75	68.5	455	624
XL	510	130	506	650	753.4	420	1165	65	75	68.5	470	638

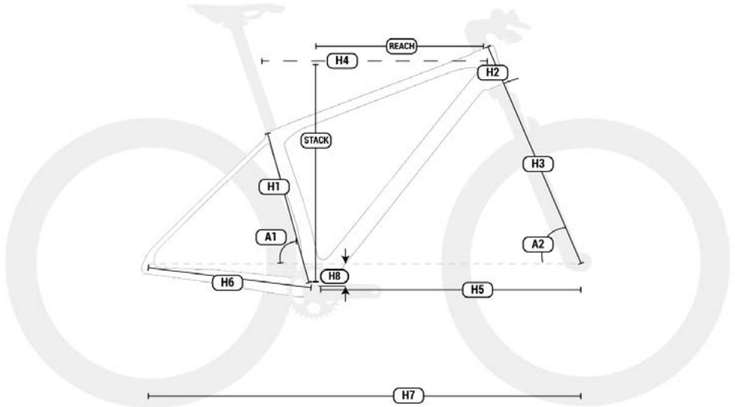

TECHNICAL SPECIFICATIONS

Characteristics	Models	Specification
Frame materials	All	Carbon
Recommended use	All	Cross country
Sizes	All	S, M, L and XL
Suspension design	All	Front suspension
Fork travel	All	100
Maximum fork length (axle to crown)	All	510 mm
Fork offset	All	44 mm
Shock absorber dimensions	All	Contact the model's supplier.
Steering	All	1.5" - 1/8" Steerer
Chain line	All	52 mm
Wheel size	All	29"
Maximum size of the rear tyre	All	2.4" (61 mm)
Maximum size of the front tyre	All	Depends on the type of fork.
Standard rear axle	All	Boost 12x148 mm
Rear axle pitch thread	All	1 mm – UDH compatible
Length of the rear axle	All	173 mm
Seat post diameter	All	31.6 mm
Seat post clamp diameter	All	Built-in
Maximum insertion length of the seat post		
S	All	200 mm
M	All	220 mm
L	All	240 mm
XL	All	240 mm

Characteristics	Models	Specification
Compatible with a telescopic seat post with internal cabling	All	Yes
Front derailleur	All	No. Single gear.
Maximum chain ring size	All	38T
Minimum chain ring size	All	28T
Compatible with the oval chain ring	All	Yes
Type of brakes	All	Disc brakes
Standard rear brake calliper	All	Flat Mount
Front disc size	All	According to the fork manufacturer
Rear disc size	All	160 mm
Compatible with chain guides	All	No
ICGS	All	No
Cabling	All	ICR Acros – HT inlet. Full housing
Compatible with left rear brake cabling	All	Yes
Bottle holder	All	All sizes. Standard bottle holder.
Potentiometer compatibility	All	No
Compatible with trailers	All	No
Pannier rack assembly	All	No
Mudguard assembly	All	No
Child seat assembly	All	No
Maximum recommended weight (cyclist+equipment+bags)	All	165 kg

DIMENSIONS OF THE STEERING TUBE

ALL MODELS

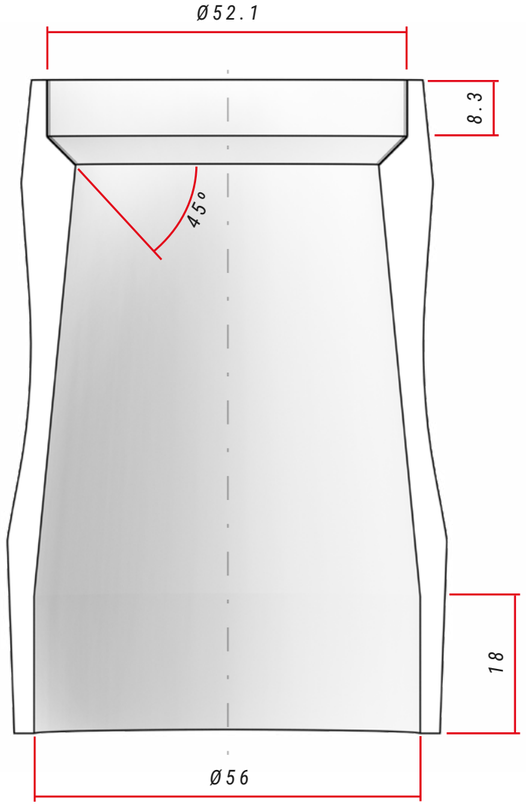

STEERING SPECIFICATIONS

	Type	Contact angle with the compression ring / fork track	Bearing dimensions
Upper	1-1/8" Steerer	45º	52x42x7
Lower	1,5" Steerer	45º	52x40x7, R2

HEADSET ASSEMBLY

ALL MODELS

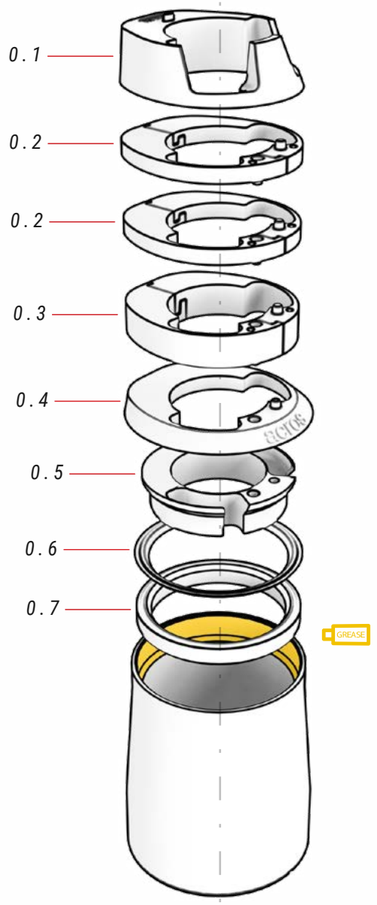

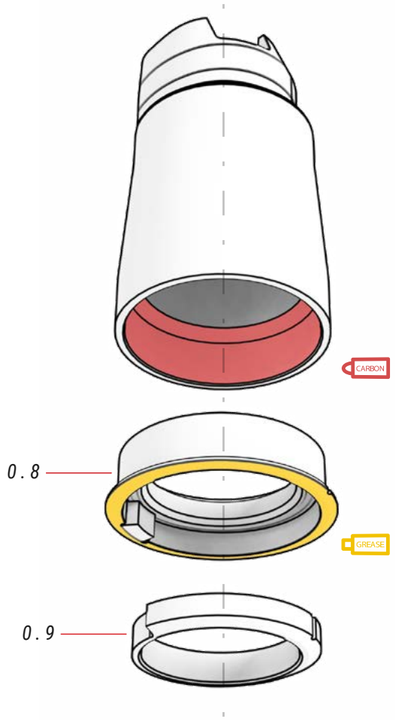

Part 0.8 can be mounted with the notch facing the frame, but part 0.9 must always be mounted in the first position, as shown in the images.

00 JUEGO DE DIRECCIÓN

ref.: 383248100

No.	Item	Quantity
0.1	Top cover, cable insertion point	1
0.2	5 mm spacer (2 parts)	2
0.3	10 mm spacer (2 parts)	1
0.4	Steering tube cover	1
0.5	Cable routing ring	1
0.6	Sealing ring	1
0.7	Angular contact bearing 42x52x7	1
0.8	Housing / Angular contact bearing 40x52x7 / Block-Lock locking piece	1
0.9	Base 1.5" chain ring, Block-Lock	1

FIT STEM ASSEMBLY

ALL MODELS

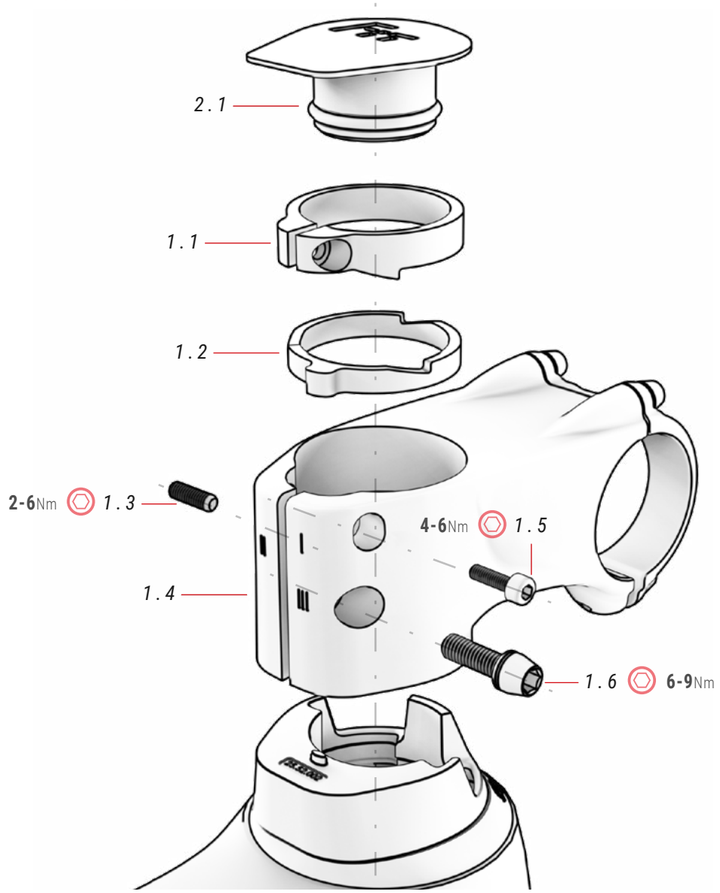

FIT STEM ASSEMBLY INSTRUCTION VIDEO

0

https://youtu.be/hJ0CCBBYKQk

⚠ Thanks to the washer system (1.1 and 1.2), the FIT stem eliminates all gaps without using a spindle. Carefully follow all of the steps described in this video to mount the stem correctly and prevent accidents.

01 FIT STEM *ref.: 363293300*

No.	Item	Quantity
1.1	Top washer	1
1.2	Bottom washer	1
1.3	Stay bolt	1
1.4	FIT stem 60mm, 31,8mm, -6º	1
1.5	Bolt	1
1.6	Bolt	1

02 FIT STEM CAP *ref.: 363293900*

No.	Item	Quantity
2.1	FIT stem cap	1

MOUNTING THE BH FIT TOOL

ALL MODELS

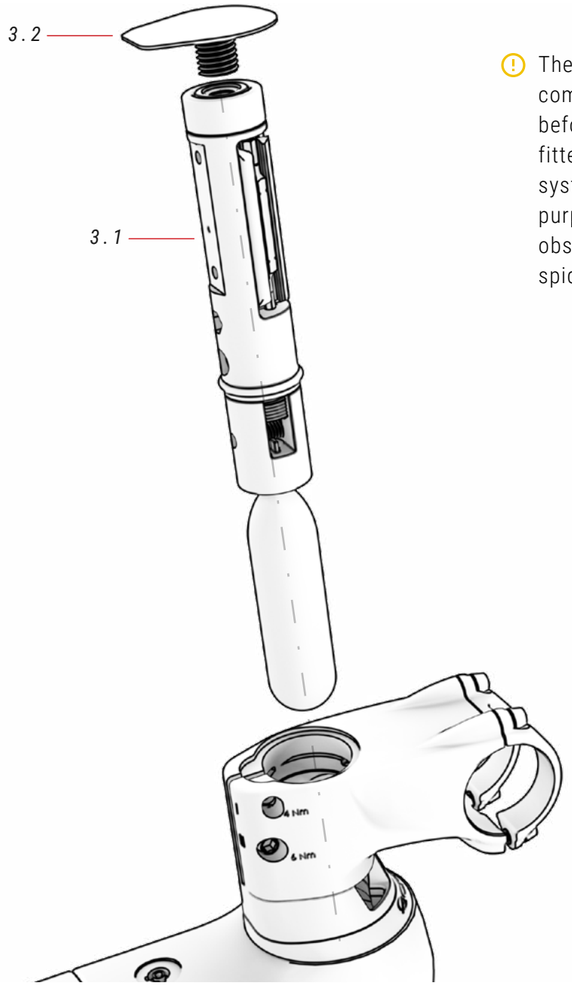

ⓘ The headset must be completely empty inside before the FIT tool can be fitted. Use the FIT washer system designed for this purpose and remove any obstacles such as the spider on the head tube.

03 FIT TOOL

No.	Item	Quantity
3.1	FIT (sold separately)	1
3.2	Threaded cover for tool. FIT	1

FIT STEM MOUNT WITH THE SPIDER

ALL MODELS

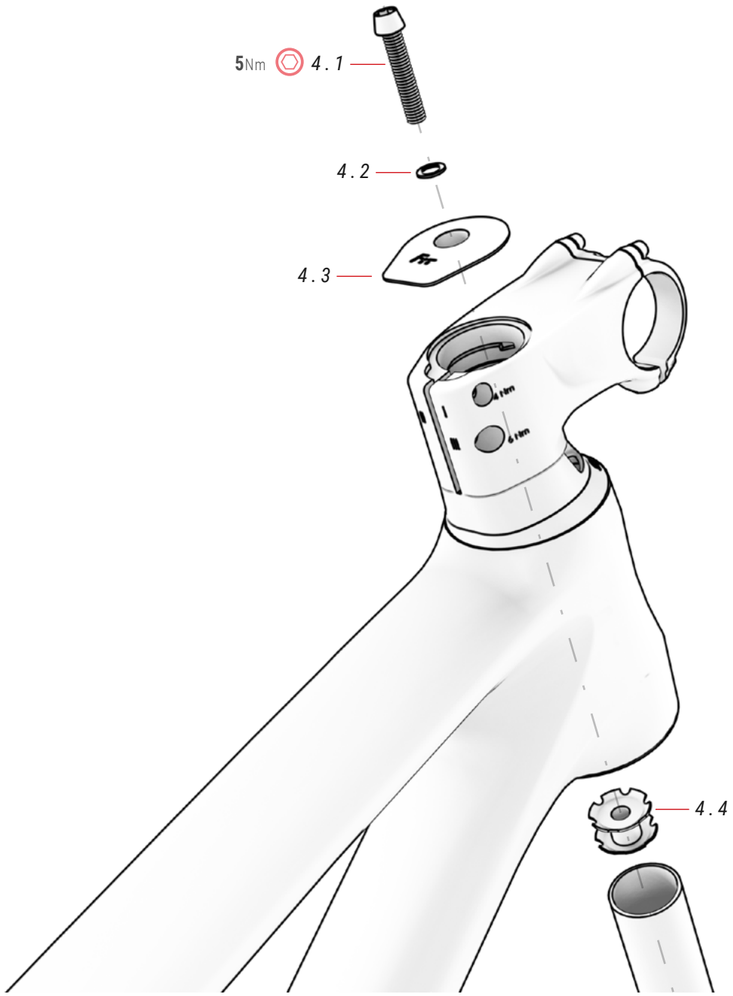

04 FIT COVER AND SPIDER ref.: 363297300

No.	Item	Quantity
4.1	Bolt	1
4.2	Washer	1

No.	Item	Quantity
4.3	FIT cover with spider mounting	1
4.4	Spider	1

The innovative washer system of the FIT stem allows you to eliminate clearances in the headset while keeping the steerer tube free to mount the FIT tool inside the steerer tube. If you do not mount the FIT tool, the FIT stem allows you to mount the headset with the traditional spider system if you prefer. The steps for mounting the headset using the spider system are described below:

⚠ Not following the steps described in this section correctly may result in a serious accident. Be sure to apply the specified torque to each bolt.

1. INSERT THE SPIDER INTO THE STEERER TUBE OF THE FORK.

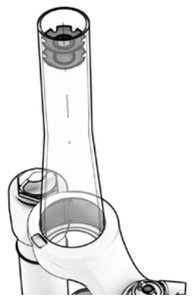

⚠ It is recommended to use a duller to ensure that the spider is inserted into the steerer tube perfectly aligned.

2. INSERT THE FORK INTO THE STEERER TUBE AND TIGHTEN THE UPPER BOLT (5NM) TO ELIMINATE CLEARANCES.

⚠ The washers will have no function when the spider is added. Therefore, you can choose to remove them or store them inside the stem.

3. TIGHTEN STEM BOLT "III" TO SECURE THE ENTIRE HEADSET.

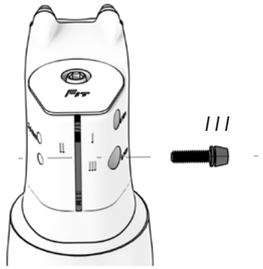

⚠ The stem must be perfectly aligned with the wheel.

4. IF YOU DO NOT REMOVE THE WASHERS, TIGHTEN BOLT "I" FIRST AND THEN BOLT "II". TO REMOVE THE STEM, START BY REMOVING BOLT "II".

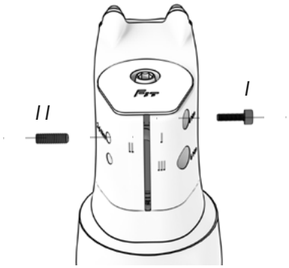

⚠ The purpose of tightening the bolts is to keep the washers from moving. Therefore, do not apply too much torque.

MOUNTING THE BUILT-IN LOCK ON THE SADDLE'S SEAT POST

ALL MODELS

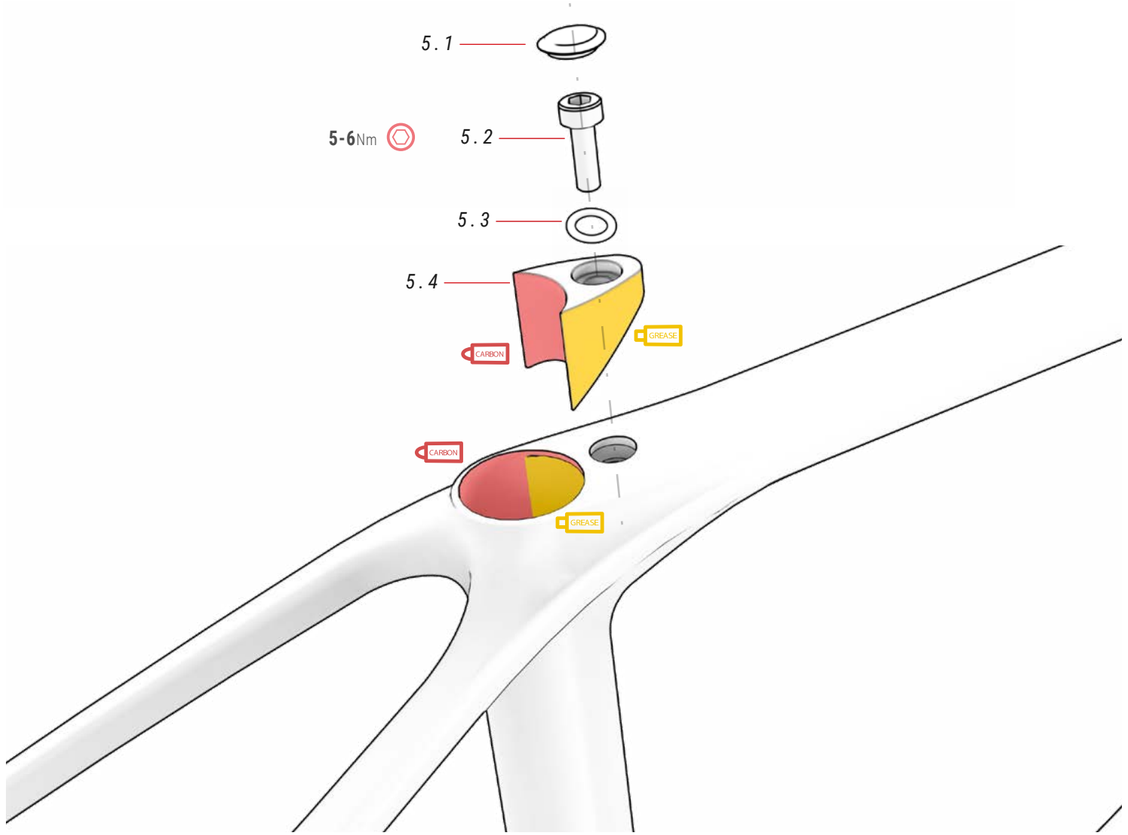

05 SEAT POST CLAMP PLUG *ref.: 391775800*

No.	Item	Quantity
5.1	Cap	1
5.2	Bolt M6xP1.0xL25 mm	1
5.3	Washer ø6x10x1 mm	1
5.4	Shim	1

⚠ Tightening the nut screws for the carbon seatposts.

UDH HANGER

ALL MODELS

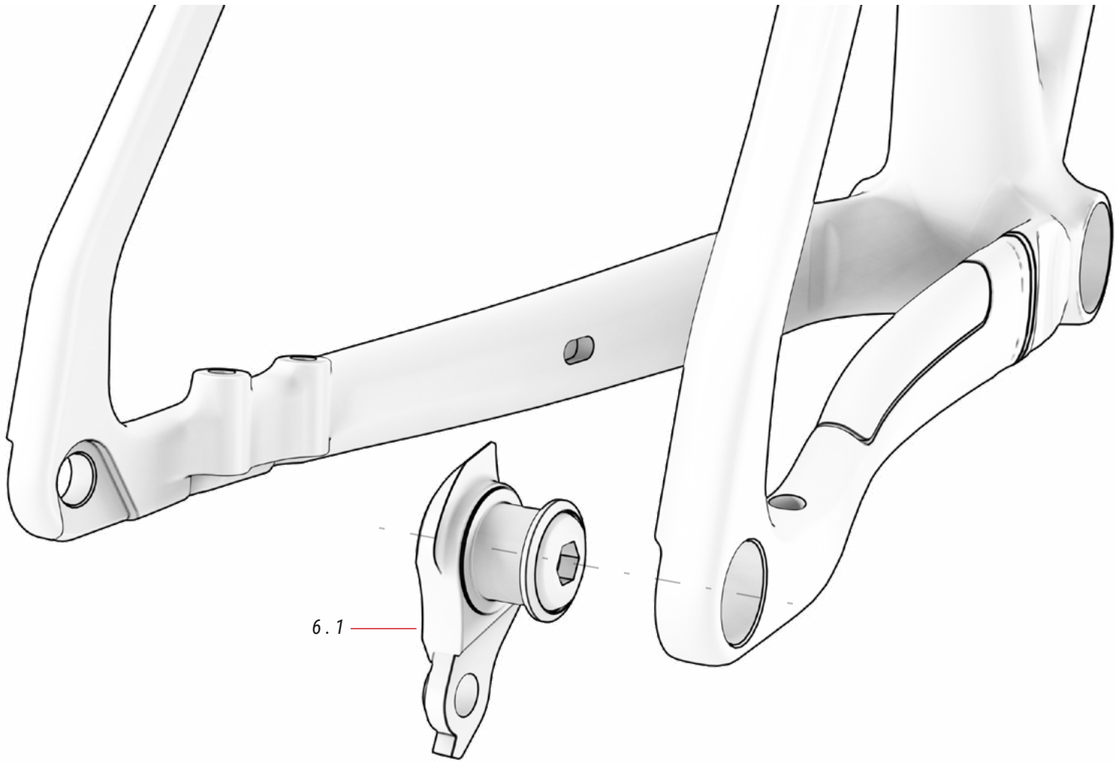

06 UDH HANGER *ref.: 391756100*

No.	Item	Quantity
6.1	UDH hanger	1

CHAIN STAY PROTECTOR

ALL MODELS

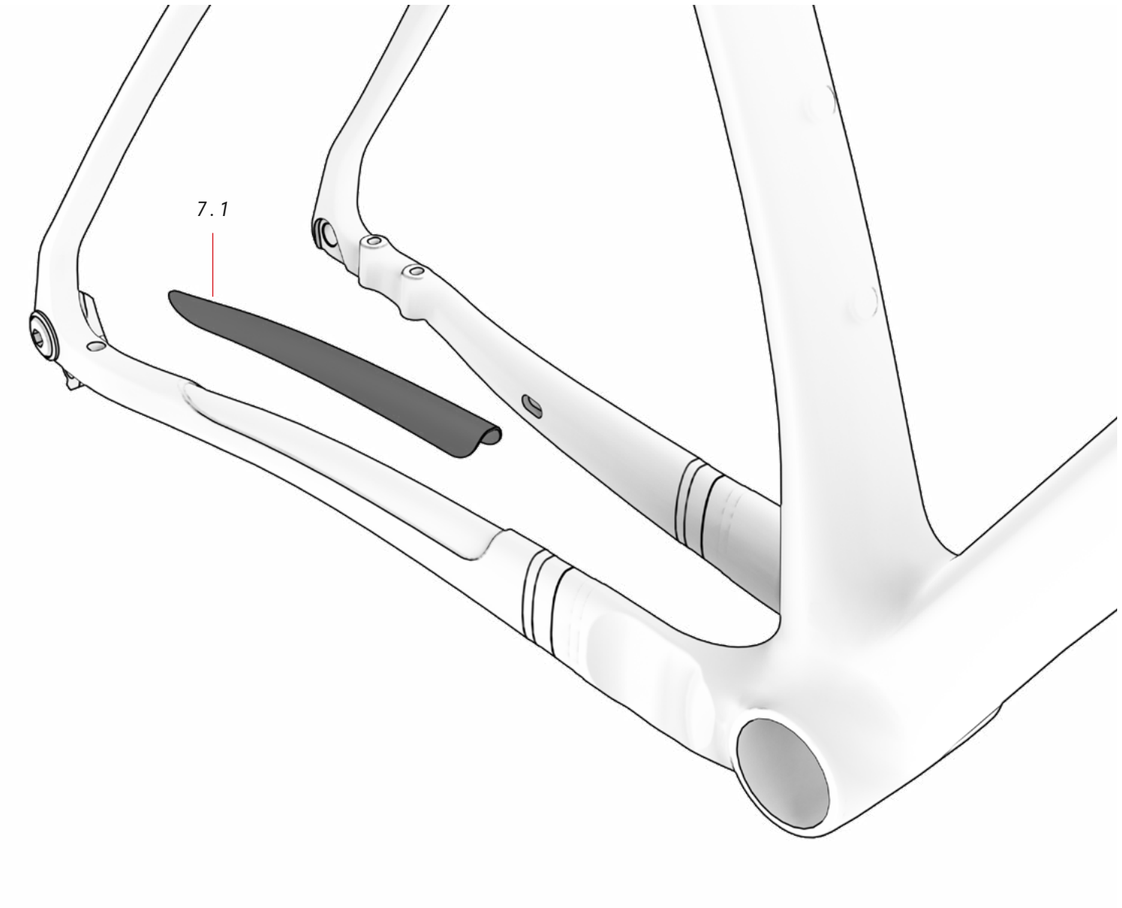

07 CHAIN STAY PROTECTOR *ref.: 391801000*

No.	Item	Quantity
7.1	Chain stay protector	1

CABLING OF THE MECHANICAL PARTS

ALL MODELS

The cables are routed from the frame to the chainstays, so these are covered and protected at all times.

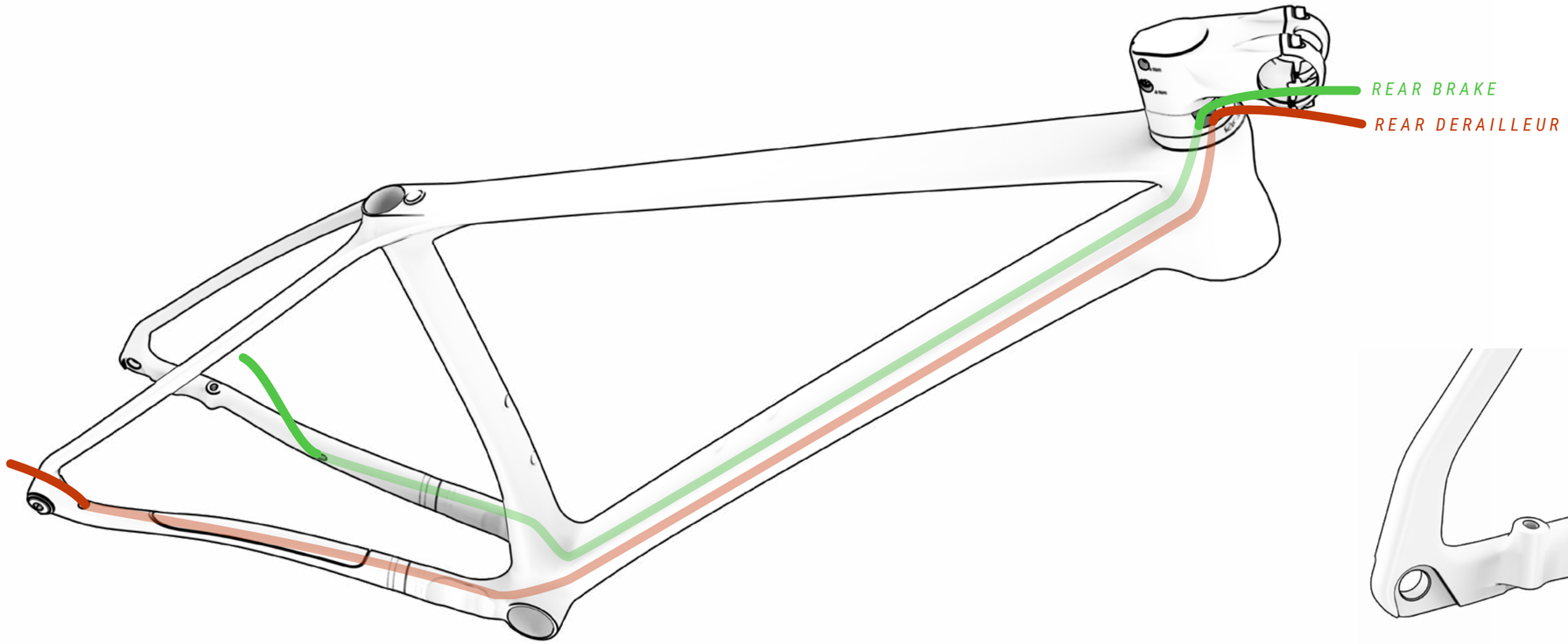

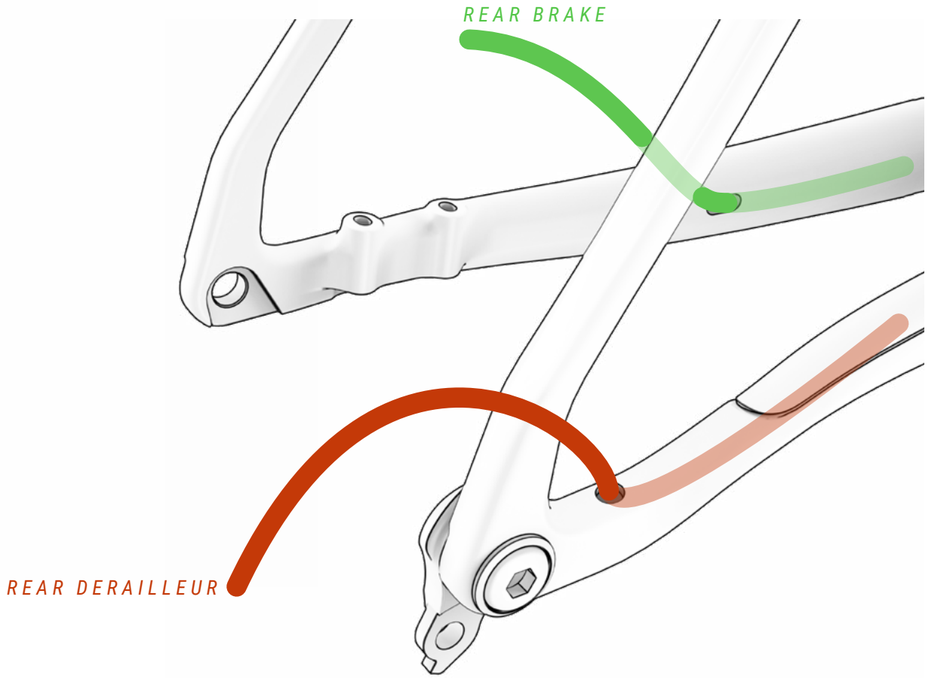

08 DECLARATION OF CONFORMITY

Declaration of Conformity

The manufacturer:

BH BIKES EUROPE, SL
c/ Perretagana 10,
01015 Vitoria, Spain

Hereby declares that the following products:

Product description: Bicycles
Models' designation:

MOUNTAIN BICYCLES:

LYNX TRAIL 9.5, LYNX TRAIL 9.0, LYNX TRAIL 8.0, LYNX TRAIL 7.0, LYNX RACE 9.9, LYNX RACE 9.5, LYNX RACE 9.2, LYNX RACE 9.0, LYNX RACE 8.5, LYNX RACE 8.0, LYNX RACE 7.5, LYNX RACE 7.0, LYNX RACE 6.5, LYNX RACE 6.0, LYNX RACE 4.0, LYNX RACE 3.0, LYNX SLS 9.5, LYNX SLS 9.0, LYNX SLS 8.5, LYNX SLS 8.0, LYNX SLS 7.5, LYNX SLS 7.0, LYNX SLS 6.5, LYNX SLS 6.0, ULTIMATE 9.5, ULTIMATE 9.0, ULTIMATE 8.5, ULTIMATE 8.0, ULTIMATE 7.7, ULTIMATE 7.5, ULTIMATE 7.0, ULTIMATE 6.5, ULTIMATE 6.0, EXPERT 5.5, EXPERT 5.0, EXPERT 4.5, EXPERT 4.0, SPIKE 3.0, SPIKE 2.5, SPIKE 2.0, SPIKE 1.0.

RACING BICYCLES:

ULTRALIGHT 9.0, ULTRALIGHT 8.0, ULTRALIGHT 7.0, ULTRALIGHT 6.0, AEROLIGHT 9.0, AEROLIGHT 8.0, AEROLIGHT 7.0, AEROLIGHT 6.0, RS1 5.5, RS1 5.0, RS1 4.5, RS1 4.0, RS1 3.5, SL1 4.5, SL1 4.0, SL1 3.5, SL1 3.0, QUARTZ 1.5, QUARTZ 1.0, AEROTT 8.0, AEROTT 7.0, AEROTT 6.0, GRAVELX CARBON 6.5R, GRAVELX CARBON 6.0AT, GRAVELX CARBON 5.5R, GRAVELX CARBON 5.0AT, GRAVELX CARBON 4.5R, GRAVELX CARBON 4.0AT, GRAVELX CARBON 3.5R, GRAVELX CARBON 3.0AT, GRAVELX CARBON 2.5 R, GRAVELX CARBON 2.0AT, GRAVELX 2.5, GRAVELX 2.0, GRAVELX 1.8, GRAVELX 1.5, GRAVELX 1.0, RX TEAM 5.0, RX TEAM 4.0, RX TEAM 3.0

CITY AND TREKKING BICYCLES:
OXFORD, OXFORD JET, OXFORD JET LITE, OXFORD JET PRO, OXFORD LITE, OXFORD PRO, SILVERTIP, SILVERTIP JET, SILVERTIP JET LITE, SILVERTIP JET PRO, SILVERTIP LITE, SILVERTIP PRO.

YOUNG CHILDREN AND YOUNG ADULTS BICYCLES:
EXPERT 26" DISC, ESPERT JUNIOR 14", EXPERTE JUNIOR 16", EXPERT JUNIOR 18", EXPERT JUNIOR 20", EXPERT JUNIOR 20" PRO, EXPERT JUNIOR 20" SUS, EXPERT JUNIOR 24", EXPERT JUNIOR 24" DISC, EXPERT JUNIOR 24" PRO, EXPERT JUNIOR 26", EXPERT JUNIOR 26" PRO.

Year of manufacture: 2026 and 2027

Comply with all of the relevant requirements of RD 339/2014, de 9 de Mayo.
Production control is assured by our Quality Management System, which fulfills the requirements of the standard ISO 9001

The following harmonized standards have been applied:
ISO 4210-1/2/3/4/5/8/7/8/9 – Safety requirements for bicycles
ISO 8098 Safety requirements for bicycles for young children
EN 16054 BMX bicycles. Safety requirements and test methods

Technical documentation filed at:
BH BIKES EUROPE, SL
C/ Perretagana 10,
01015 Vitoria, Spain

Prepared and reviewed by the BH Quality Department (Headquarters)

Rev. 15 08/06/2025 Pag. 1 of 1

09 HELP AND ADDITIONAL RESOURCES

BH offers different channels to resolve your queries. In addition, you can join our global cyclist community on our social media.

TECHNICAL RESOURCES

You can find all of the resources you need to fine-tune your bicycle on the BH Bikes website. Click on the link below to access the user manuals, apps, warranties, display update files and videos that explain different operations:

https://www.bhbikes.com/manuals

You can also check out our step-by-step tutorials to learn how to maintain and fine-tune your bicycle on our specialised Youtube channel:

https://www.youtube.com/user/ServicioTecnicoBH

CONTACT US

Our authorised dealers have the necessary knowledge and resources to help you with anything you need in relation to your bicycle. Don't hesitate to contact your nearest store. You can find it by clicking on the link below:

https://www.bhbikes.com/es_INT/tiendas/buscador-de-tiendas

To contact us directly:

Tel.: + 34 945 13 52 02

info@bhbikes.com

P.I. Jundiz- Perretagana 10, 01015 Vitoria, Alava (Spain)

SOCIAL MEDIA

Join our global cyclist community. Discover the BH experiences of other cyclists and share yours.